Dunedin City Council – Land Information Memorandum

Property Address: 48 Tanner Road Dunedin

Prepared for: Amy Elizabeth Hooson
Prepared on: 24-Nov-2026

Property Details:

Property ID	5105419
Address	48 Tanner Road Dunedin
Parcels	LOT 10 DP 20665

Disclaimer:

Issued in accordance with Section 44A of the Local Government Official Information and Meetings Act 1987

Should you require further clarification of any of the information listed in this report, please phone our Customer Services Agency on 03 477 4000.

This Land Information Memoranda (LIM) has been prepared in accordance with Sections 44A, 44B, 44C, and 44D of the Local Government Official Information and Meetings Act 1987. It contains only information obtained from the records held by the Dunedin City Council as at 24-Nov-2026

The Dunedin City Council has not carried out an inspection of the land and/or buildings for the purposes of preparing this LIM. The Dunedin City Council records may not show illegal or unauthorised buildings or works on the land. Accordingly this report may not necessarily reflect the current status of the property. Examples of situations which affect the property but are not recorded in this report include: unauthorised work not known to Council and breaches of Consents or Licences that are not the subject of a formal Requisition or Notice. The applicant is solely responsible for ensuring that the land or any building or works on the land is suitable for a particular purpose. The applicant should check the Certificate(s) of Title as this report may not include information that is registered on the Certificate(s) of title. The Certificate(s) of title may record further information or obligations relating to the land.

Further information about this property may be available from other agencies such as the Otago Regional Council, Nova Gas, Telecom New Zealand (Chorus) or Delta Utility Services Limited.

DUNEDIN CITY COUNCIL | kaunihera a-rohe o Ōtepoti

Contents

Dunedin City Council – Land Information Memorandum 1
Property Address: 48 Tanner Road Dunedin 1
Prepared for: Amy Elizabeth Hooson 1
Prepared on: 24-Nov-2026 1
Property Details: 1
Disclaimer: 1
s44A(2)(a) Information identifying any special feature or characteristics of the land 4
District Plan Hazard Information 4
Other Natural Hazard Information 4
Flood Hazards 4
Land Stability Hazards 4
Coastal Hazards 4
Seismic Hazards 4
Other Natural Hazards 4
Otago Regional Council Hazard Information 4
Contaminated Site, Hazardous Substances and Dangerous Goods 4
Contaminated Site Information 4
Historic Dangerous Goods Licence(s) 4
Hazardous Substances 4
s44A(2)(b) Information on private and public stormwater and sewerage drains 5
Drainage 5
Foul Sewer and Waste Water 5
Public Sewer Sheets 5
Dunedin City Council Private Drainage plans incomplete 5
s44A(2)(bb) Information Council holds regarding drinking water supply to the land 5
Water Supply 5
s44A(2)(c) Information relating to any rates owing in relation to the land 6
Rates Details 6
Rates Assessment Details 6
s44A(2)(d) Consents, Certificates, Notices, Orders or Requisitions affecting the land or any buildings on the land 6
(da) the information required to be provided to a territorial authority under section 362T(2) of the Building Act 2004:s44A and 6
(2)(e) Information concerning any Certificate issued by a Building Certifier pursuant to the Building Act 1991 or the Building Act 2004 6
Building and Drainage Consents 7
Building and Drainage Permits 7
Non-consented Small Stand-alone Dwellings 7
Building Notices 7
Resource Consents 7
Consent Notices 7
Alcohol Licensing 8
Health Licensing 8
s44A(2)(ea) Information notified under Section 124 of the Weathertight Homes Resolution Services Act 2006 8
s44A (2)(f) Information relating to the use to which the land may be put and any conditions attached to that use 8

District Plan 8
District Plan Map 8
s44A(2)(g) Information regarding the land which has been notified to Council by another statutory organisation 8
s44A(2)(h) Information regarding the land which has been notified to Council by any network utility operator pursuant to the Building Act 1991 or Building Act 2004 9
Section 44A(3) Information concerning the land as the authority considers, at its discretion, to be relevant.. 9
Building Information 9
Drainage 9
Minimum Floor Levels 9
Planning 9
Resource Consents within 50m of 48 Tanner Road Dunedin 9
3 Waters 13
Information Regarding Watercourses 13
Transport 13
Parks and Reserves 14
Glossary of Terms and Abbreviations 15
Consent, Permit, Licence & Complaint types 15
Terms used in Permits & Consents 16
General terms 16
Appendices 17

s44A(2)(a) Information identifying any special feature or characteristics of the land

District Plan Hazard Information

Refer to District Plan for Natural Hazards Information *section: s44A (2)(f) Information relating to the use to which the land may be put and any conditions attached to that use*.

Other Natural Hazard Information

Flood Hazards

No information.

Land Stability Hazards

No information.

Coastal Hazards

No information.

Seismic Hazards

No information.

Other Natural Hazards

No information.

Otago Regional Council Hazard Information

The Regional Council is required to provide information that it holds on Natural Hazards:
https://www.orc.govt.nz/managing-our-environment/natural-hazards/otago-natural-hazards-database

Contaminated Site, Hazardous Substances and Dangerous Goods

Contaminated Site Information

No information.

Historic Dangerous Goods Licence(s)

No information.

Hazardous Substances

No information.

WARNING – Change in legislation and management of hazardous substances
On 1 April 2004, all Dunedin City Council Dangerous Goods Licences expired. From this date they became the responsibility of the Environmental Protection Authority (EPA) under the Hazardous Substances and New Organisms Act 1996.

All new licences for hazardous substances were issued by independent Test Certifiers approved by the EPA. The Council no longer holds current information on the use of hazardous substances at these premises and hazardous substances may be present without the Council's knowledge.

The Council was advised by the EPA in 2016 that Worksafe had taken over responsibility for managing Location Test certificates under the Hazardous Substances and New Organisms Act 1996.

The EPA no longer hold any information in relation to Location Test Certificates If you have any questions, please contact Worksafe.

s44A(2)(b) Information on private and public stormwater and sewerage drains

Drainage

Drainage plans on file are indicative only.
Obtaining your own independent review may be required before commencing drainage works.

Foul Sewer and Waste Water

Drainage Reticulation Plans
A copy of the Dunedin City Council's drainage infrastructure in the vicinity of the subject property is attached. Public foul sewers are show in red and stormwater sewers in green. All public drainage services are available to receive connections from the property and limited flows of stormwater may also be discharged to the street channel or an approved outfall.

Public Sewer Sheets

WARNING. Please note that public sewer reticulation sheets are scaled in either Imperial feet or Metric metres. Please check with the Duty Drainage Inspector if in doubt.

Dunedin City Council Private Drainage plans incomplete

WARNING. The Dunedin City Council's private drainage records (plans) prior to 1 January 1993 may be incomplete or not clearly recorded. Owners therefore are advised to carry out work with due care to avoid damage to any private drain not detailed because of the lack of information filed in the Council's records.

s44A(2)(bb) Information Council holds regarding drinking water supply to the land

Water Supply

Urban water supply area – Connected
This property is connected to the Dunedin City Council's urban (on-demand) water supply. Indicative water pressures are available to view at www.dunedin.govt.nz/water-pressure, and flows available to the property can be provided on request. Any change in water use (e.g. for a new commercial activity) requires a new application to be made to the Council. It is recommended that the applicant check the property for the location and suitability of the water service.

Terms and conditions of supply
All new and existing connections to the Dunedin City Council's water supply network are subject to the terms and conditions of the Dunedin City Council Water Bylaw 2011. The bylaw is available to view at www.dunedin.govt.nz/water-bylaw.

Water pressure
Indicative network water pressure to the property is shown on maps available at www.dunedin.govt.nz/water-pressure. Specific detail is available on request.

Water reticulation maps
A copy of the water reticulation map of Dunedin City Council infrastructure in the vicinity of the subject property is attached. These show the location of the water main in the road. It may or may not show the water service to the property. It is recommended that the applicant check the property.

s44A(2)(c) Information relating to any rates owing in relation to the land

Rates Details

Rates Assessment Details

Rate Account	2068612
Address	48 Tanner Road Dunedin
Valuation Number	26850-17409
Latest Valuation Details	
Capital Value	$1,000,000
Land Value	$385,000
Value of Improvements	$615,000
Area (Hectares)	0.078HA
Units of Use	1
Current Rates	
Current Rating Year Starting	01-Jul-2026
Dunedin City Council Rates	$5,513.30
Rates Outstanding for Year	$2,756.66

For further explanation on the rate account, or to enquire about information referred to on this page, please contact Rates Staff between 8:30am and 5:00pm weekdays at the enquiries counter on the Ground floor of the Civic Centre, 50 The Octagon, Dunedin, or by phoning 477 4000.

s44A(2)(d) Consents, Certificates, Notices, Orders or Requisitions affecting the land or any buildings on the land

(da) the information required to be provided to a territorial authority under section 362T(2) of the Building Act 2004:s44A and

(2)(e) Information concerning any Certificate issued by a Building Certifier pursuant to the Building Act 1991 or the Building Act 2004

Building and Drainage Consents

The following consents are recorded for this property:

Status Key:	BC	Building Consent Issued
	CCC	Code Compliance Certificate Issued
	CCC Refused/Archived	Building code compliance could not be confirmed under section 41 of the Building Act 1991 and sections 93, 93(2)(b), and 94 of the Building Act 2004.
	Lapsed	Work has not commenced and no extension of time applied for within 12 months of date of consent issue. Consent is of no further effect

NOTE: This is not a comprehensive list of all building consent statuses

ABA-2004-304465 Building Consent - Fit New Door

Lodgement Date	09-Jun-2004
Decision	Granted
Decision Date	09-Jun-2004
Current Status	**CCC Issued**
Previous Number *(Applications before 2007)*	ABA41699

ABA-2014-48 Building Consent - Alter Dwelling - Relocate and Install New Kitchen, Retrofit Double Glazed Windows, Doors (Majority), Install Skylight, Beams, Remove Bath, Remove Walls, Hot Water Cylinder, Fire

Lodgement Date	22-Jan-2014
Decision	Granted
Decision Date	01-Apr-2014
Current Status	**CCC Issued**
Previous Number *(Applications before 2007)*	

Building and Drainage Permits

H-1989-105868 AAB19893064
6955 - Erect Dwelling and Install Yunca Multifuel Heater, (Stevenson). The permit was lodged on 30-Aug-1989.
H-1987-222537 AAD19870554
L1848 - Laterals for Subdivision Drainage. The permit was lodged on 30-Oct-1987.
H-1990-230502 AAD19902644
L8031 - Plumbing and Drainage for New Dwelling, (Stevenson). The permit was lodged on 30-Oct-1990.

Non-consented Small Stand-alone Dwellings

There are no SSD applications for this property.

Building Notices

No Building Notices

Resource Consents

There are no resource consents for this property.

Consent Notices

There are no Consent Notices recorded for this property. It is recommended that the applicant check the Record of Title for any notices or covenants that may affect the property.

Alcohol Licensing

There are no records of any Alcohol Licences for this property.

Health Licensing

There are no records of any Health Licences for this property.

s44A(2)(ea) Information notified under Section 124 of the Weathertight Homes Resolution Services Act 2006

No information.

s44A (2)(f) Information relating to the use to which the land may be put and any conditions attached to that use

District Plan

This property is subject to the Operative Dunedin City Second Generation District Plan 2026 (2GP), which became fully operative on 17 June 2026. The 2GP, including planning maps, is available on the Dunedin City Council website https://www.dunedin.govt.nz/council/district-plan/2nd-generation-district-plan and at all Dunedin City Council service centres and libraries.

SECOND GENERATION DISTRICT PLAN INFORMATION

Zoning

- General Residential 1 (refer Section 15, Residential)

Scheduled Items

- Nil

Overlay Zones

- Nil

Mapped Areas

- Nil

District Plan Map

The District Plan map is available online here. Instructions on how to use the map are available here.

You can also access the District Plan map and instructions by visiting the Dunedin City Council 2GP Website at:
https://www.dunedin.govt.nz/council/district-plan/2nd-generation-district-plan

s44A(2)(g) Information regarding the land which has been notified to Council by another statutory organisation

No information.

s44A(2)(h) Information regarding the land which has been notified to Council by any network utility operator pursuant to the Building Act 1991 or Building Act 2004

No information.

Section 44A(3) Information concerning the land as the authority considers, at its discretion, to be relevant.

Building Information

Drainage

Form 5 (building consent) copy

This property contains building consent application/s where a copy of the building consent (Form 5) is not able to be provided.
This may be due to the age of the consent and/or processes that were in place at the time.

Minimum Floor Levels

Clause E1.3.2 of the New Zealand Building Code requires that surface water, resulting from an event having a 2% probability of occurring annually, shall not enter buildings. This requirement applies to Housing, Communal Housing, Communal Residential and Communal non-residential buildings. For guidance when establishing minimum floor levels please refer to : https://www.dunedin.govt.nz/services/building-services/minimum-floor-levels and for links to specific areas: https://www.dunedin.govt.nz/services/building-services/minimum-floor-levels/mfl-guidance

For further explanation on the current status of any building consent, or to enquire about information referred to in this section, please contact Building Services Staff between 8:30am and 5:00pm weekdays at the enquiries counter on the Ground floor of the Civic Centre, 50 The Octagon, Dunedin, or by phoning 477 4000.

Planning

Resource Consents within 50m of 48 Tanner Road Dunedin

5065354 20 Booth Road Dunedin

RMA-2003-367056 Resource Management Act (Historical Data) REMOVAL OF VEGETATION AT THE SUBJECT PROPERTY (Other). The outcome was Granted on 16/09/2003.

5066935 6 Hadley Close Dunedin

RMA-1995-350686 Resource Management Act (Historical Data) SCHEME PLAN 670 SUBDIVISION CREATING NINE RESIDENTIAL LOTS, ROAD TO VEST AND LOCAL PURPOSE RESERVE (Non-Notified - Non Complying). The outcome was Granted on 24/09/1990.

5066936 1 Hadley Close Dunedin

RMA-1995-350686 Resource Management Act (Historical Data) SCHEME PLAN 670 SUBDIVISION CREATING NINE RESIDENTIAL LOTS, ROAD TO VEST AND LOCAL PURPOSE RESERVE (Non-Notified - Non Complying). The outcome was Granted on 24/09/1990.

5066938 52 Tanner Road Dunedin
RMA-1995-350686 Resource Management Act (Historical Data) SCHEME PLAN 670 SUBDIVISION CREATING NINE RESIDENTIAL LOTS, ROAD TO VEST AND LOCAL PURPOSE RESERVE (Non-Notified - Non Complying). The outcome was Granted on 24/09/1990.

5067077 54 Tanner Road Dunedin
RMA-1995-350686 Resource Management Act (Historical Data) SCHEME PLAN 670 SUBDIVISION CREATING NINE RESIDENTIAL LOTS, ROAD TO VEST AND LOCAL PURPOSE RESERVE (Non-Notified - Non Complying). The outcome was Granted on 24/09/1990.

5067488 5 Hadley Close Dunedin
RMA-1995-350686 Resource Management Act (Historical Data) SCHEME PLAN 670 SUBDIVISION CREATING NINE RESIDENTIAL LOTS, ROAD TO VEST AND LOCAL PURPOSE RESERVE (Non-Notified - Non Complying). The outcome was Granted on 24/09/1990.

5067739 4 Hadley Close Dunedin
RMA-1995-350686 Resource Management Act (Historical Data) SCHEME PLAN 670 SUBDIVISION CREATING NINE RESIDENTIAL LOTS, ROAD TO VEST AND LOCAL PURPOSE RESERVE (Non-Notified - Non Complying). The outcome was Granted on 24/09/1990.

5068253 2 Hadley Close Dunedin
RMA-1995-350686 Resource Management Act (Historical Data) SCHEME PLAN 670 SUBDIVISION CREATING NINE RESIDENTIAL LOTS, ROAD TO VEST AND LOCAL PURPOSE RESERVE (Non-Notified - Non Complying). The outcome was Granted on 24/09/1990.

5069683 12 Hadley Close Dunedin
RMA-1996-359888 Resource Management Act (Historical Data) SUBDIVIDE CERTIFICATE OF TITLE 14A/72 INTO TWO PARCELS (Non-Notified - Unrestricted Discretionary). The outcome was Granted on 14/11/1996.
RMA-1995-350686 Resource Management Act (Historical Data) SCHEME PLAN 670 SUBDIVISION CREATING NINE RESIDENTIAL LOTS, ROAD TO VEST AND LOCAL PURPOSE RESERVE (Non-Notified - Non Complying). The outcome was Granted on 24/09/1990.

5102248 11 Hadley Close Dunedin
RMA-1995-357281 Resource Management Act (Historical Data) TWO LOT SUBDIVISION (Non-Notified - Non Complying). The outcome was Granted on 10/07/1995.
RMA-1995-350686 Resource Management Act (Historical Data) SCHEME PLAN 670 SUBDIVISION CREATING NINE RESIDENTIAL LOTS, ROAD TO VEST AND LOCAL PURPOSE RESERVE (Non-Notified - Non Complying). The outcome was Granted on 24/09/1990.

5102607 9 Hadley Close Dunedin
RMA-1995-357281 Resource Management Act (Historical Data) TWO LOT SUBDIVISION (Non-Notified - Non Complying). The outcome was Granted on 10/07/1995.
RMA-1995-358769 Resource Management Act (Historical Data) CERTIFICATE OF COMPLIANCE (Other). The outcome was Granted on 18/08/1995.
RMA-1995-350686 Resource Management Act (Historical Data) SCHEME PLAN 670 SUBDIVISION CREATING NINE RESIDENTIAL LOTS, ROAD TO VEST AND LOCAL PURPOSE RESERVE (Non-Notified - Non Complying). The outcome was Granted on 24/09/1990.

5103527 55 Burma Road Dunedin
SUB-2007-148 Subdivision Consent 2 lot subdivision of a site partly designated for water catchment purposes with split rural/residential 1 zoning.. The outcome was Granted on 19/09/2007.

5104152 20 Booth Road Dunedin
LUC-2019-247 Land Use Consent land use consent for the establishment of a large-scale public artwork on a heritage structure. The outcome was Granted on 26/06/2019.
OUT-2013-5 Outline Plan outline plan for upgrade of Ross Creek Dam. The outcome was Accept in Whole on 27/01/2014.
SUB-2007-148 Subdivision Consent 2 lot subdivision of a site partly designated for water catchment purposes with split rural/residential 1 zoning.. The outcome was Granted on 19/09/2007.
RMA-2003-367056 Resource Management Act (Historical Data) REMOVAL OF VEGETATION AT THE SUBJECT PROPERTY (Other). The outcome was Granted on 16/09/2003.
RMA-1989-350532 Resource Management Act (Historical Data) Subdivision Boundary Adjustment Ownr:DCC / App: N.J. Dunckley PO Box 5045 (Non-Notified - Non Complying). The outcome was Granted on 03/11/1989.
RMA-1989-350531 Resource Management Act (Historical Data) Subdivision Boundary Adjustment Ownr:DCC WATER / App: N.J. Dunckley PO Box 5045 (Non-Notified - Non Complying). The outcome was Granted on 06/06/1990.

5135628 10 Hadley Close Dunedin
SUB-2021-152 Subdivision Consent a two lot fee simple subdivision. The outcome was Granted on 01/09/2021.
RMA-1996-359888 Resource Management Act (Historical Data) SUBDIVIDE CERTIFICATE OF TITLE 14A/72 INTO TWO PARCELS (Non-Notified - Unrestricted Discretionary). The outcome was Granted on 14/11/1996.
RMA-1995-350686 Resource Management Act (Historical Data) SCHEME PLAN 670 SUBDIVISION CREATING NINE RESIDENTIAL LOTS, ROAD TO VEST AND LOCAL PURPOSE RESERVE (Non-Notified - Non Complying). The outcome was Granted on 24/09/1990.

5135629 10A Hadley Close Dunedin
BACT-2022-20 Boundary Activity Notice To construct a dwelling and associated structures that breach the height to boundary planes and yard setbacks.. The outcome was Issued on 28/06/2022.
LUC-2021-509 Land Use Consent the erection of a new dwelling and associated earthworks with performance standard breaches both prior to and following creation of Lot 2 of SUB-2021-152. The outcome was Granted on 01/09/2021.
SUB-2021-152 Subdivision Consent a two lot fee simple subdivision. The outcome was Granted on 01/09/2021.
RMA-1996-359888 Resource Management Act (Historical Data) SUBDIVIDE CERTIFICATE OF TITLE 14A/72 INTO TWO PARCELS (Non-Notified - Unrestricted Discretionary). The outcome was Granted on 14/11/1996.
RMA-1995-350686 Resource Management Act (Historical Data) SCHEME PLAN 670 SUBDIVISION CREATING NINE RESIDENTIAL LOTS, ROAD TO VEST AND LOCAL PURPOSE RESERVE (Non-Notified - Non Complying). The outcome was Granted on 24/09/1990.

The information provided with this LIM on District Plan requirements and resource consents has been verified by City Planning in relation to the subject property only. All information included in relation to other land surrounding the site is indicative.

Accuracy of Boundaries
Knowing the true location of the property boundaries on the ground is important in determining what can be carried out on the land under the District Plan and in determining whether the current activity complies with the District Plan or any resource consent. Please note that the Council's aerial photographs may not accurately depict the extent of the property. The Record of Title for the site should be checked in the first instance. A surveyor may need to be consulted to establish the true location of the title boundaries on the ground.

Access to Site
The legality of any access to the site is important in determining what can be carried out on the land under the District Plan and in determining whether the current activity complies with the District Plan or any resource consent. It is recommended that the Record of Title and/or a lawyer be consulted regarding the legality of any legal and/or physical access to the site (and the maintenance thereof).

Heritage New Zealand Pouhere Taonga Act 2014
The Heritage New Zealand Pouhere Taonga Act 2014 applies in addition to any protection provided to a building or site by the District Plan. The Heritage New Zealand Pouhere Taonga Act 2014 makes it unlawful for any person to destroy, or modify the whole or any part of an archaeological site, whether or not the land on which the site is located is designated, or a resource or building consent has been issued, without the prior authority of Heritage New Zealand. The Heritage New Zealand Pouhere Taonga Act 2014 defines an archaeological site as a place associated with pre-1900 activity, where there may be evidence relating to the history of New Zealand. Pre-1900 buildings are considered archaeological sites under the Heritage New Zealand Pouhere Taonga Act 2014 and are also often associated with subsurface archaeological remains that provide evidence of pre-existing use of the site. Council records may not necessarily identify the precise date upon which an existing building was constructed. Contact the Dunedin office of Heritage New Zealand for further information: infodeepsouth@heritage.org.nz; 03 477 9871.

Resource Management (National Environmental Standard for Assessing and Managing Contaminants in Soil to Protect Human Health) Regulations 2011
The Resource Management (National Environmental Standard for Assessing and Managing Contaminants in Soil to Protect Human Health) Regulations 2011 came into force on 1 January 2012. The National Environmental Standard applies to any piece of land on which an activity or industry described in the current edition of the Hazardous Activities and Industries List (HAIL) is being undertaken, has been undertaken or is more likely than not to have been undertaken. (The current edition of the HAIL is available on the Ministry for the Environment website at www.mfe.govt.nz.) Activities on HAIL sites may need to comply with permitted activity conditions specified in the National Environmental Standard and/or might require resource consent. (The Otago Regional Council should also be consulted for any rules in might have in regards to the use or development of contaminated sites.)

If a person wishes to establish whether a piece of land has had hazardous activities or industries conducted on it, and thus whether activities on that land are controlled by the National Environmental Standard, then the person must pay for a review of the information about the land held by the Council, or pay for a suitably qualified and experienced practitioner to undertake a preliminary site inspection. Formal confirmation from the Council that resource consent is not required under the National Environmental Standard can only be given through a certificate of compliance application.

If you would like a copy of any Resource Consent decision or advice on the current status and relevance of any planning matter referred to in the LIM, enquiries may be made at the Planning Enquiries desk on the Ground Floor of the Civic Centre, 50 The Octagon, or by phoning 477 4000 and asking for the Duty Planner.

Planners are available at the Planning Enquiries desk to answer your enquiries between 8:30am and 5:00pm weekdays.

3 Waters

Information Regarding Watercourses

The controlling authority for all water and waterbodies in Dunedin City is the Otago Regional Council. The Regional Plan: Water addresses water take and use, diversions, damming, discharges and bed alteration under the Resource Management Act 1991. They are also responsible for the Flood Protection Management Bylaw 2012.

The controlling authority for watercourses in relation to stormwater drainage, and removal of obstructions in accordance with Local Government Act 1974 is the Dunedin City Council. The Council also issues building and resource consents for certain works around watercourses.

Not all watercourses within Dunedin City are recorded or known to the Council, therefore it is recommended that the applicant inspect the property for watercourses.

For further information on watercourses it is recommended the applicant read the Watercourse Information Sheet. A copy of this document is available on request or for download from the Dunedin City Council website www.dunedin.govt.nz.

Transport

DCC Transport has carried out a desktop inspection of this property and found the following:

Encroachment on road reserve – privately owned vegetation and fence over footpath/road reserve.
It appears that the hedge and fence at this property's frontage on Tanner Road and Hadley Close are encroaching on the footpath/road reserve. Private vegetation is required to be maintained so that it does not interfere with footpath users or extend over your property boundary. This may remain at the pleasure of Council, however, please beware that you may be asked to remove these at any anytime, at your cost for the location of utility operators' assets or DCC roading improvements and an encroachment license may be required in the future. Council accepts this situation but accepts no liability. Maintenance is the responsibility of the property owner. The Council may require this to be addressed in the future.

Non-compliant vehicle crossing – no stormwater run-off.
It appears there are no stormwater provisions in place for this vehicle crossing. To meet current Council standards the stormwater run-off would be required to be captured at the boundary and managed in a way where it does not cause a nuisance to neighbouring properties, including the road corridor. For example: a strip drain with sump or a sump and piped to the kerb and channel. Council accepts this situation but accepts no liability and the maintenance is the responsibility of the property owner. This may be required to be upgraded in the future.

Private stormwater lateral.
Private stormwater laterals collect stormwater from private properties guttering and runs under the footpath to the kerb and channel on the roadside. The stormwater laterals are private pipes and are the responsibility of the landowner who they service, the repair and maintenance of these pipe's rests solely with the property owner. As the landowner you must maintain your stormwater lateral to ensure that it doesn't become a safety hazard for pedestrians or other road users.

For further explanations on property owner obligations in regard to local road encroachments, vehicle entrances, vegetation management or retaining structures please refer to the Dunedin City Council website at http://www.dunedin.govt.nz/services/roads-and-footpaths or contact Transport on 477 4000.

For properties abutting the state highway, Waka Kotahi NZ Transport Agency is the Road Controlling Authority.

Parks and Reserves

Description	Next to Park or Reserve.
Details	**This property has been identified as being next to a park or reserve.** Please be aware that Council encourages appropriate public usage of the park/reserve and may develop the park/reserve in the future to facilitate use. You also need to be aware that there are many unapproved encroachments into parks/reserves, as well as many unapproved vehicle accesses into private property across parks/reserves land. In such situations it cannot be taken for granted that Council will automatically approve such an encroachment or access-way, and the owner may be asked to remove it. Because of this you should clarify where the boundary of this property is and your means of vehicle access into it.

Glossary of Terms and Abbreviations

The following are abbreviations and terms that may appear as a part of a LIM.

Consent, Permit, Licence & Complaint types

AAB	DCC Building permit
AAD	DCC Drainage permit
AAG	Green Island drainage permit
AAH	Hyde permit
AAK	St Kilda permit
AAM	Mosgiel permit
AAP	Port Chalmers permit
AAS	Silverpeaks permit
AAT	Maniototo permit
AMD	Amendment to a Building Consent
BCC	Building Compliance Certificate - Sale and Supply of Alcohol Act
CER	Certifier
DGL	Dangerous Goods Licensing
ENV	Health complaint
HTH	Health licence
LIQ	Alcohol licence
NTR	Notice to Rectify
POL	Planning Other Legislation
RMA	Resource Management Act - Resource consent
RMC	Resource consent complaint

Terms used in Permits & Consents

ALT	Alteration
ADD	Addition
BD D/C	Board drain in common
BLD	Building
BLDNG	Building
BT	Boundary trap
B/T	Boiler tube
CCC	Code Compliance Certificate
DAP	Drainage from adjacent property
DGE	Drainage
DIC	Drain in common
DR	Drainage
DWG	Dwelling
FS	Foul sewer
HEA	Heater
ICC	Interim Code Compliance
MH	Manhole
PL	Plumbing
PLB	Plumbing
PTE	Private
SIS	Sewer in section
WC	Water course
WT	Water table
SW	Stormwater

General terms

RDMS	Records and Document Management System

DUNEDIN CITY COUNCIL | kaunihera a-rohe o Ōtepoti

Appendices



Photographic Map

Scale at A4:
1:750
18/11/2026
8:01 PM

N

PARCEL LINES CAN VARY FROM LEGAL PARCEL BOUNDARES
This map is for illustration purposes only and is not accurate to surveying, engineering or orthophotographic standards. Every effort has been made to ensure correctness and timeliness of the information presented.

2018-2019 Urban, Copyright DCC/Aerial Surveys Ltd. Rural, ORC/Aerial Surveys Ltd. CC BY 4.0 NZ

2013 Urban and rural photography Jan/Feb 2013. Copyright DCC. CC BY 3.0 NZ.

2006/2007 Urban photography March 2007, copyright NZAM. Rural photography March 2006, copyright Terralink International Ltd.

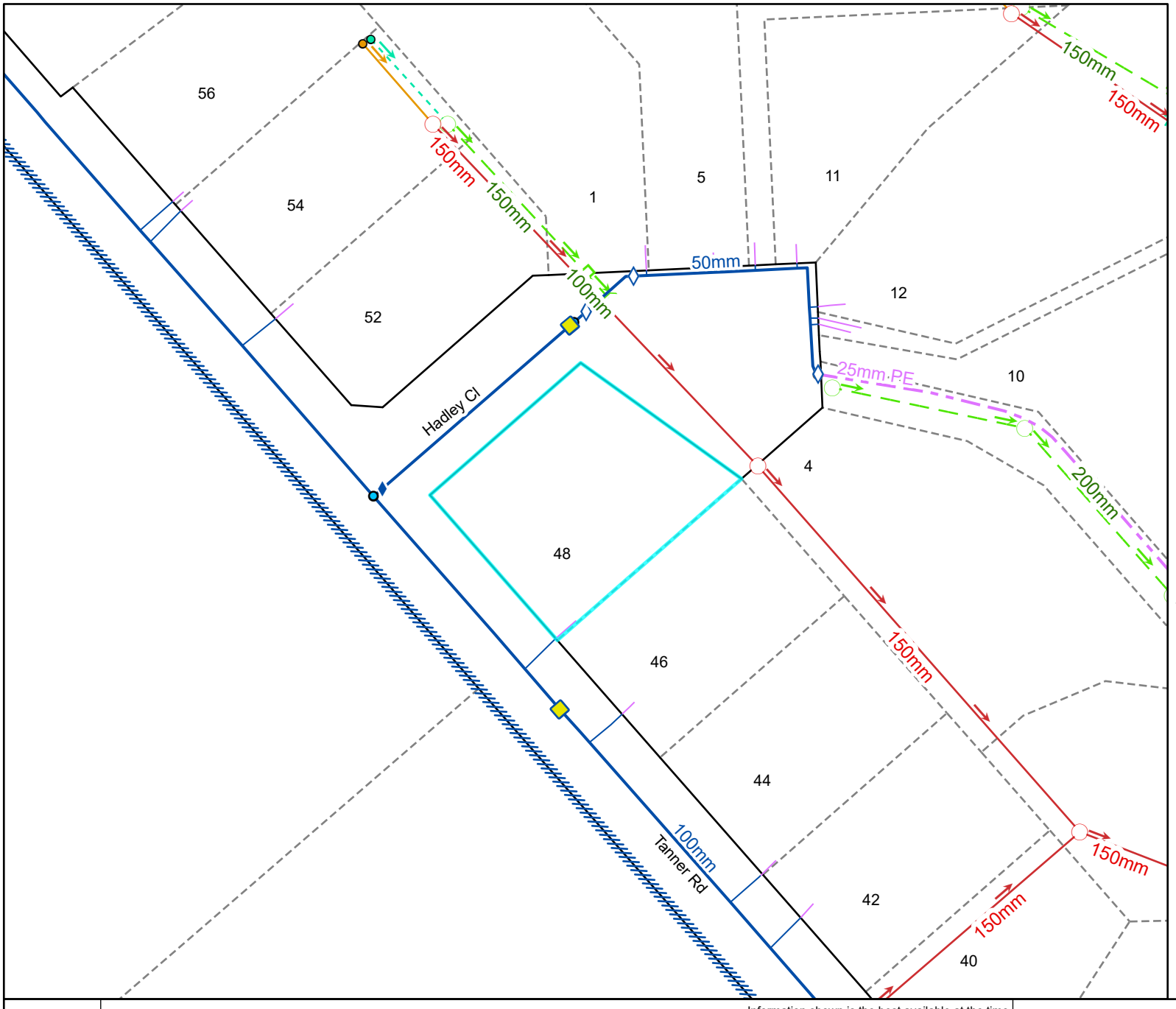

Legend

Water Supply

- Manifold Box
- Water Meter
- Toby
- Meter without manifold box
- Retic Flow Meter
- Combination Meter
- Manifold Box With Restrictor
- Water Valve - Zone
- Non Return Valve
- Water Valve - Gate
- Water Valve - Sluice
- Water Hydrant
- Water Backflow Preventor - RPZ
- Water Non-Return Valve
- Water Pump Station
- Water Bore
- Water Treatment Plant
- Water Storage Tank
- Supply Main
- Trunk Main
- Disused
- Reticulation
- Rider
- Scour
- Water Service Lateral
- Water Fire Service Lateral
- Water Critical Service Lateral
- Water Zone Boundary
- Water Reservoir
- Redundant Water Main

NOTE:
Private water services have the same symbols as those above, however they are coloured pink.

Foul Sewerage

- Standard Manhole
- Valve Chamber (pressurised)
- Boundary Kit Non-Return Valve
- Pump Station Domestic
- Drop Manhole
- Inspection Manhole
- Inspection Opening
- Lamphole
- Outlet
- Pump Station
- Treatment Plant
- Vent
- Foul Sewer Node
- Foul Drains in Common (public)
- Sewer
- Trunk Sewer
- Vent Line
- Rising Main
- Redundant Foul Sewer Pipe

NOTE:
Private foul drains have the same symbols as those above, however they are coloured orange.

Stormwater

- SW Bubble-up Tank
- SW Drop Manhole
- SW Insp Chamber and Grating Inlet
- SW Inspection Manhole
- SW Inspection Opening
- SW Lamphole
- SW Mudtank Inlet
- SW Outlet
- SW Pipe Inlet
- SW Pressure Manhole
- SW Standard Manhole
- SW Stormwater Node
- Roading Bubble-Up Tank
- Roading Mudtank
- Stormwater Main
- Stormwater Trunk Main
- DCC Open Channel
- Piped WC
- Open WC
- Culvert
- Stormwater Mudtank Pipe
- Redundant Stormwater Main
- SW Sump
- SW Pump Station

NOTE:
Private stormwater drains have the same symbols as those above, however they are coloured light green.

General

- DCC Water & Waste Structure
- Railway Centreline

Cadastral

- Parcel
- Road/Rail
- Hydro
- Motorway Parcels
- Strata
- Easment (where recorded)

Full legend can be viewed at https://www.dunedin.govt.nz/council-online/webmaps/waterservices

Council Water & Drainage Services

Information shown is the best available at the time of publishing. The accuracy and completeness of This information is variable. Private assets are typically not mapped. Recent changes may not be reflected. Verify on site before commencing work. For all enquiries phone 03 477 4000.

Scale at A4:
1:750
18/11/2026
8:01 PM

N

PARCEL LINES CAN VARY FROM LEGAL PARCEL BOUNDARES
This map is for illustration purposes only and is not accurate to surveying, engineering or orthophotographic standards. Every effort has been made to ensure correctness and timeliness of the information presented.

2018-2019 Urban, Copyright DCC/Aerial Surveys Ltd. Rural, ORC/Aerial Surveys Ltd. CC BY 4.0 NZ

2013 Urban and rural photography Jan/Feb 2013. Copyright DCC. CC BY 3.0 NZ.

2006/2007 Urban photography March 2007, copyright NZAM. Rural photography March 2006, copyright Terralink International Ltd.

L-1848
30-10-87
P.G.

MH (F)
MH (E)
Proposed Road
Not Included In Stage 1
Blank cap
MH (B)
Proposed Access
LH
Proposed 160 mm ϕ F.S
3
2
4
Commencement Of Contract
End LH (D)
100 mm ϕ Laterals
MH (C)
MH (A)
46
5
Proposed 160 mm ϕ F.S.
10
9
8
7
6
Existing F S Lamp Hole To Be Removed
Existing 150 mm dia F S
45
End Lamp Hole (G)
TANNER ROAD
ROCKSIDE ROAD

A separate application to the Drainage Board for plumbing drainage work is required. Such work shall comply fully Plumbers, Gasfitters and Drainlayers Act 1976, Plumbers, Gasfitters and Drainlayers Regulations 1978, Drainage and Plumbing Regulations 1978, and the Board's By-laws.

Stormwater to be discharged to Water Table in road as well as any sealed areas

Sanitary fittings to extension of existing foul drain

26.69 Exp

N.Z.G.S. 29/9/89

CITY ENGINEER'S OFFICE

Required level at Street Boundary Any entrance or fence shall be at a level of 120 mm above c.l. Tmr edge of road seal and constructed to the same grade as the adjoining street.

Vehicle Crossing Fee / Deposit $432 + $42 = $474

Special Conditions Asphalt disk channel paved @ 18m² @ ½ cost) Drive to be sealed 3m at entrance, landscaped, sealed for 1st 5m. inside boundary

For City Engineer Date 15-8-89

NOTE: This endorsement guarantees any levels or instructions shown on the plan

flue

roof to tongue and groove lap boarding

rusticated weather boards

12/5

2/2.4x2.2 roller doors by Owner

selected brick veneer

Elevation 1

flue

hard-edge ridge cap

corr coloursteel roofing

skylight

12/11

aluminium joinery

12/6

23/7

rusticated weather boards

100x100 post

Elevation 2

DUNEDIN CITY COUNCIL

Copy of Approved Plan and/or Specification TO BE RETAINED ON WORKS AND PRODUCED ON REQUEST OF BUILDING INSPECTOR.

DATE 30-8-89 FOR CITY ENGINEER

Proposed Residence

Lot 10 DP 20665 780 sq m.

36 Eddy

TANNER ROAD

3.8

Site Plan
scale 1:200

roof to tongue

corner battens

corr coloursteel roofing

rusticated weather boards

aluminium joinery

selected brick veneer

Elevation 3

spruce bracing to roof

toe bracing to walls

aluminium joinery

100x100 posts

selected brick veneer

Elevation 4

CITY PLANNING DEPARTMENT

Pursuant to the provisions of the District Scheme, these plans and specifications are approved, provided that no change shall be made to the details shown hereon, and contained in the specification attached hereto, and subject to

Signed [signature] 30/8/89 for City Planning Officer

R&H

Dining
Kitchen
Laundry
store
Bath
Porch
Wood
Passage
Lounge
Entry
Bed 4
Garage
Sunroom
Porch
concrete porch
100x100 post
Owner to Supply 2 copies of Manufacturers installation instructions.

Ground Floor Plan

Dress
Ensuite
Bathroom
Bed 3
Gallery
Bedroom 1
Bedroom 2
skylight

First Floor Plan

6955

Colonial Homes Ltd

Mr & Mrs STEVENSON
Proposed Residence

Designer Range
Oliver

DESIGN	COLONIAL HOMES LTD.
DRAWN	TEMM
CHECKED	
APPROVED	
DATE	July 1989

COPYRIGHT:
ALL COLONIAL HOMES DESIGNS AND PLANS ARE SUBJECT TO COPYRIGHT AND SHALL NOT BE REPRODUCED, COPIED OR USED FOR CONSTRUCTION PURPOSES UNLESS SUPPLIED WITH A KIT FROM COLONIAL HOMES LTD.

SCALE 1:100 | SHEET 1 of 3

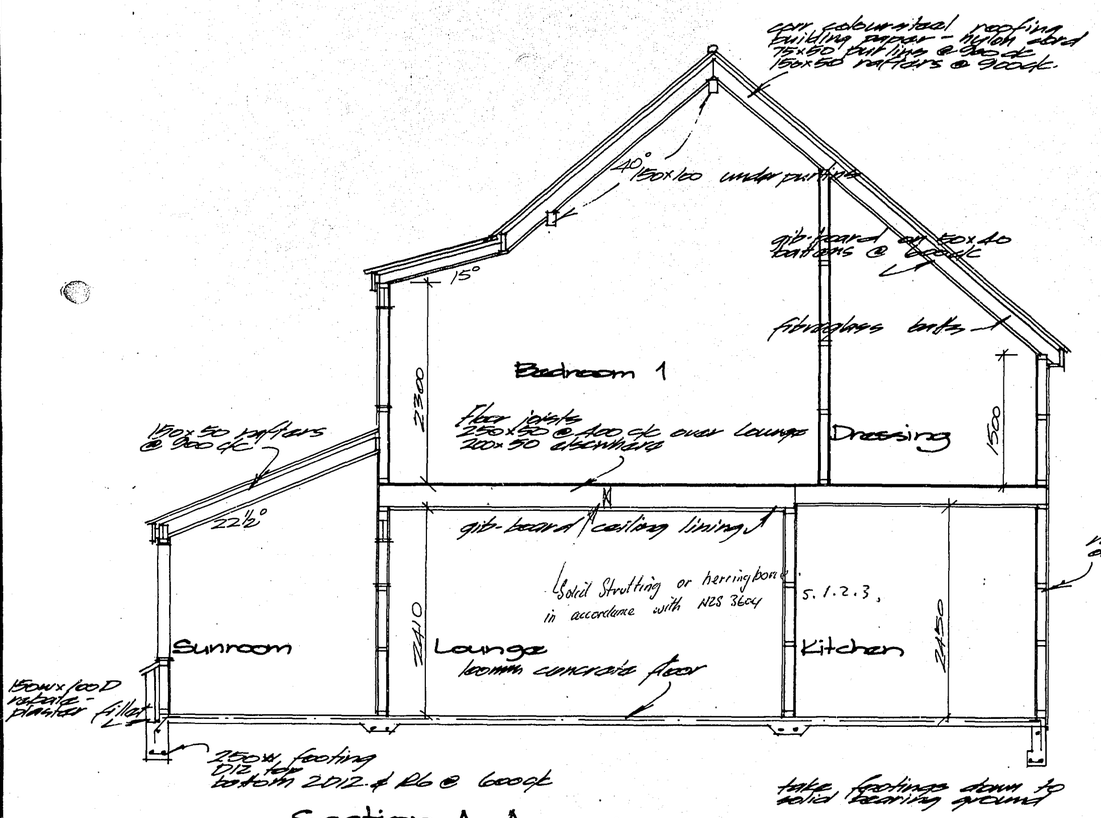

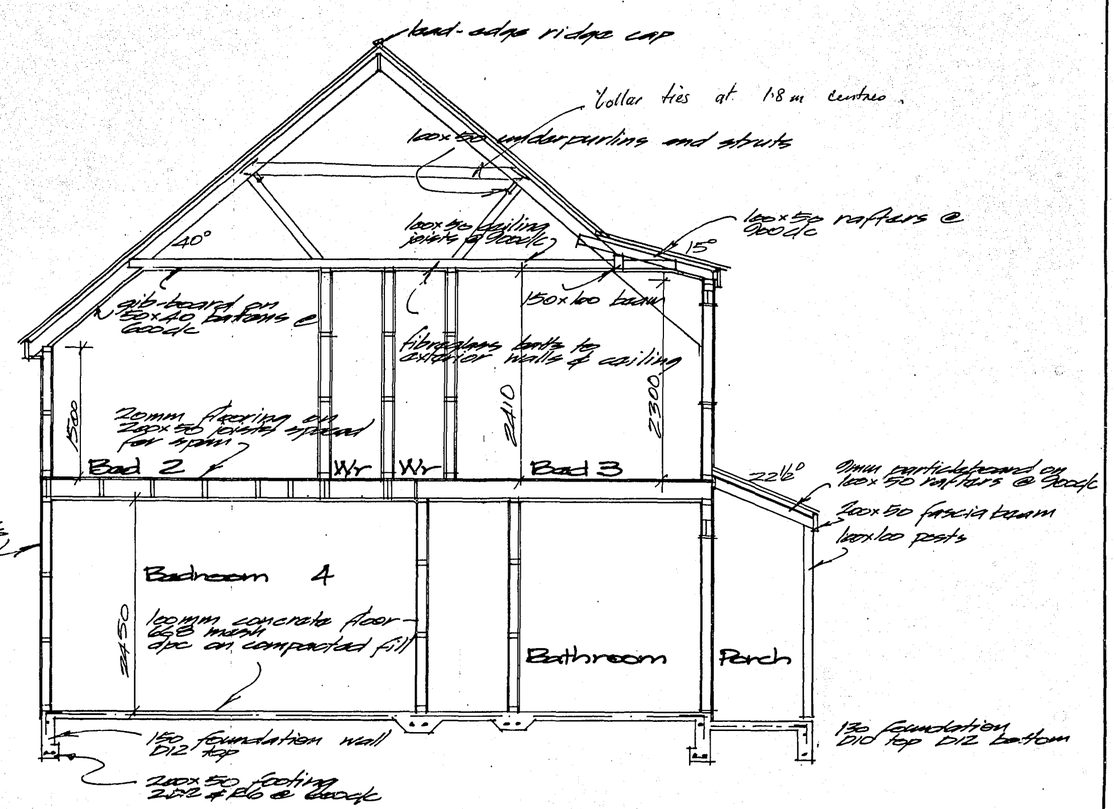

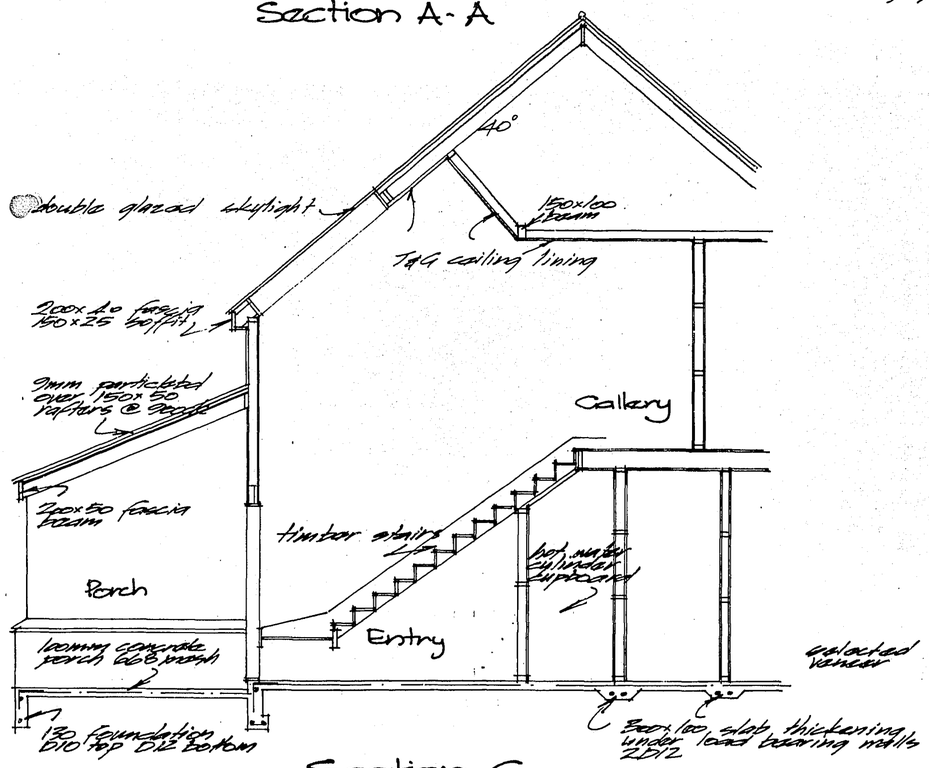

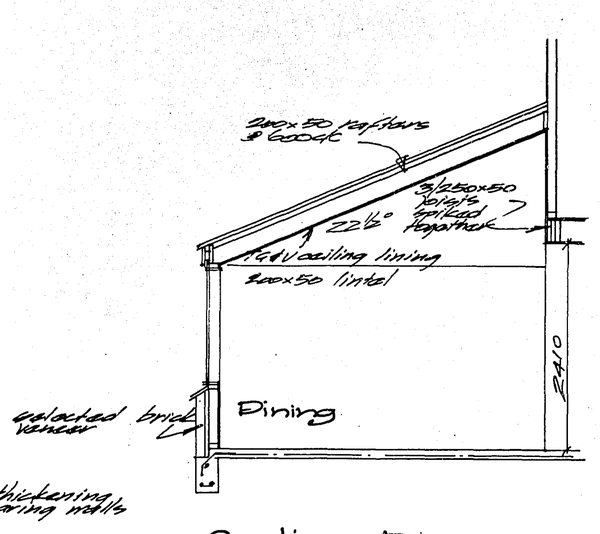

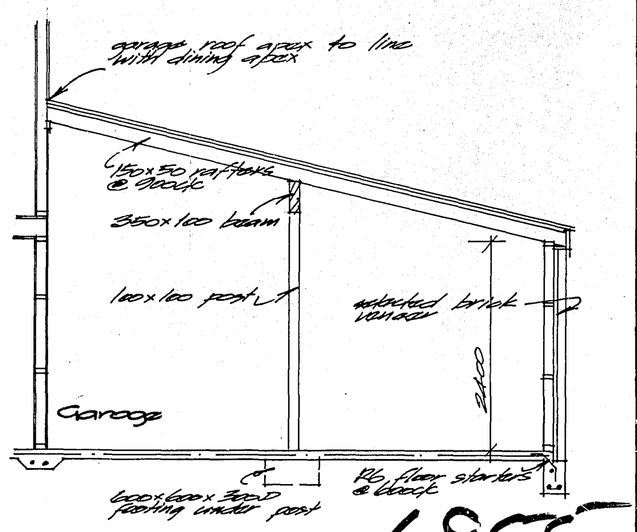

Colonial Homes Ltd

Mr & Mrs STEVENSON

Proposed Residence

Designer Range
Oliver (Alt)

DESIGN	COLONIAL HOMES LTD.
DRAWN	TEMM
CHECKED	
APPROVED	
DATE	July 1989

COPYRIGHT:
ALL COLONIAL HOMES DESIGNS AND PLANS ARE SUBJECT TO COPYRIGHT AND SHALL NOT BE REPRODUCED, COPIED OR USED FOR CONSTRUCTION PURPOSES UNLESS SUPPLIED WITH A KIT FROM COLONIAL HOMES LTD.

SCALE 1:50

SHEET 2 of 3

6955

PC L-8031
12-11-90

CITY ENGINEER'S OFFICE
Required level at Street Boundary Any entrance or fence shall be at level of 120 mm above existing edge of ..... and ..... Road ..... and constructed to the same grade as the adjoining street.
Vehicle Crossing Fee / Deposit $252 + GST $34 - $286
Special Conditions Drive to be sealed on 6m wide kerb surfaced for 1st 3m inside boundary.
For City Engineer ..... Date 16-8-89
NOTE: This endorsement overrules any levels or instructions shown on the plan

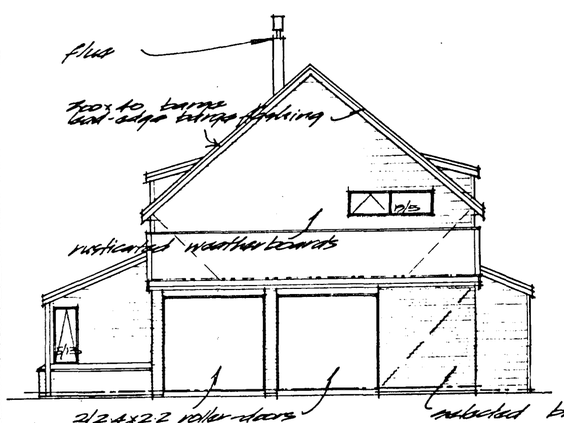

Elevation 1

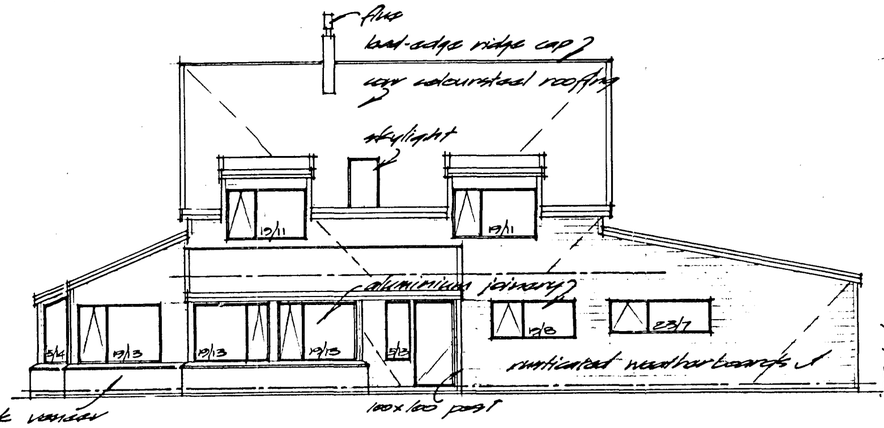

Elevation 2

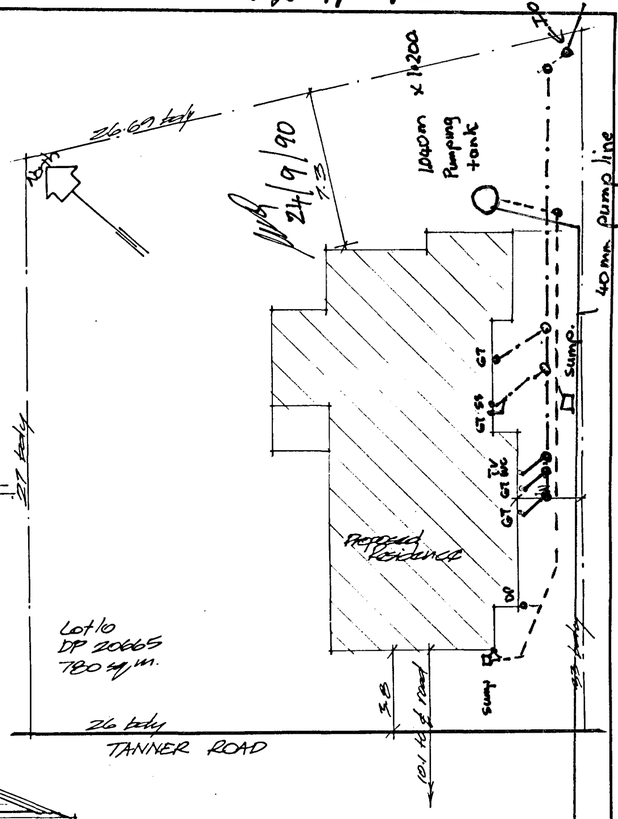

Site Plan
scale 1:200

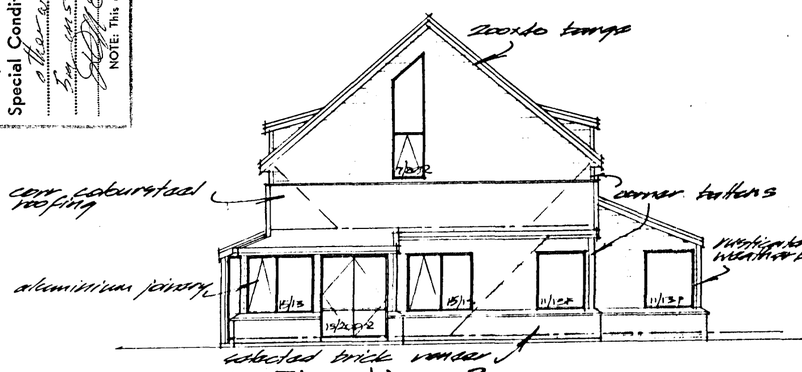

Elevation 3

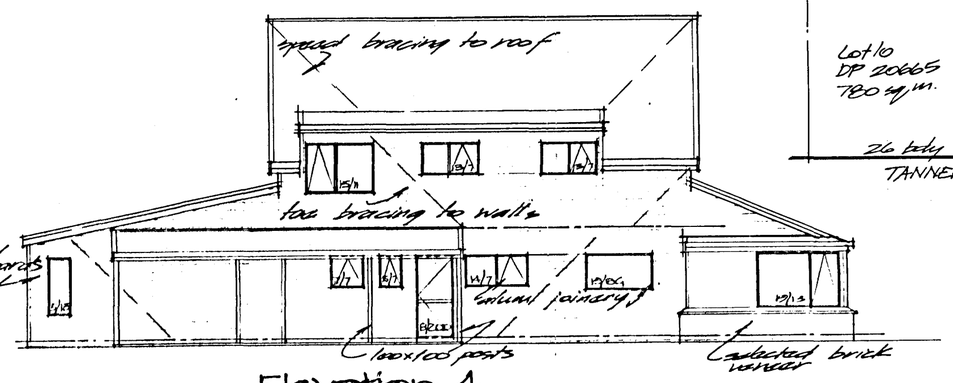

Elevation 4

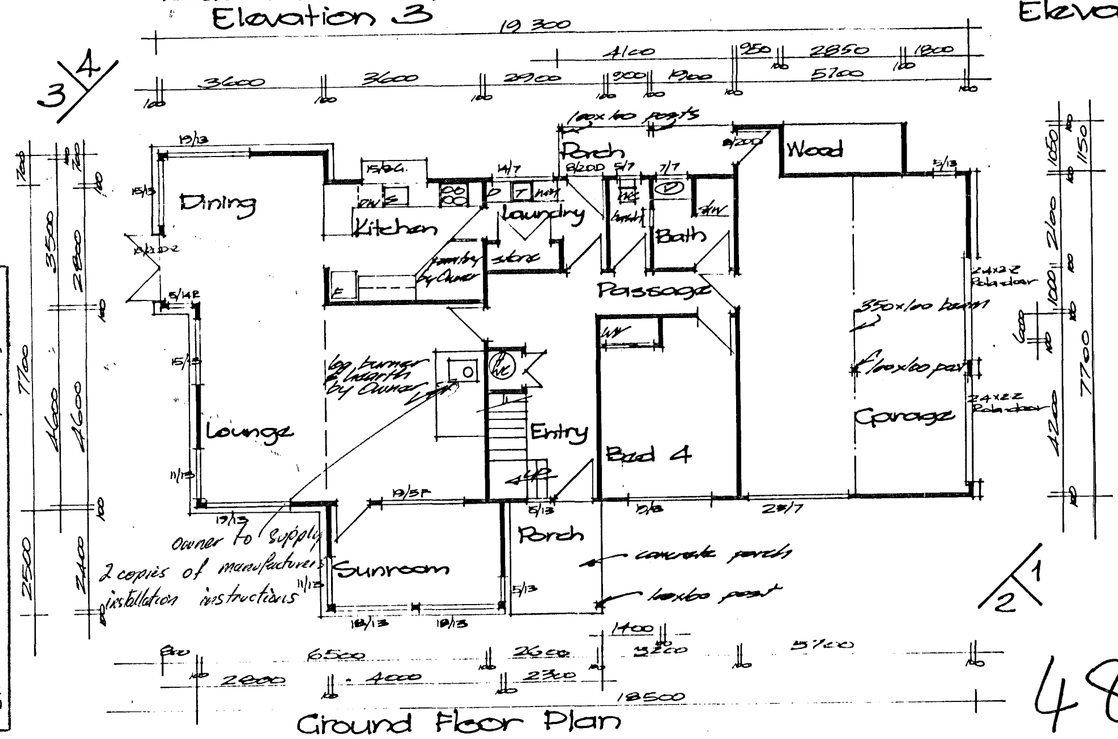

Ground Floor Plan

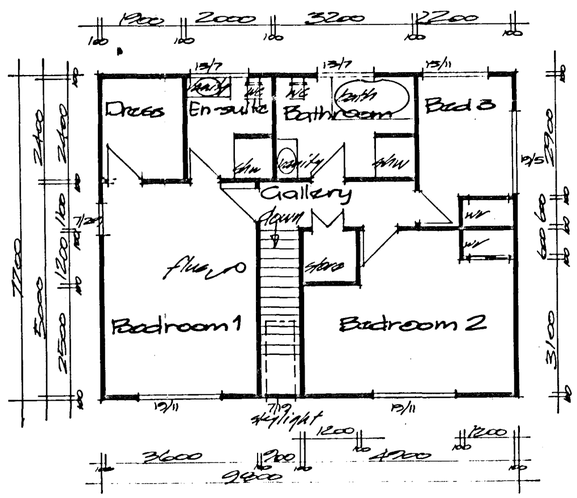

First Floor Plan

48 Tanner Road

CITY PLANNING DEPARTMENT
Pursuant to the provisions of the District Scheme, these plans and specifications are approved, provided that no change shall be made to the details shown hereon, and contained in the specification attached hereto, and subject to
Signed ..... 31/08/89 for City Planning Officer
R&H

Colonial Homes Ltd

Mr & Mrs STEVENSON
Proposed Residence

Designer Range Oliver

DESIGN	COLONIAL HOMES LTD.
DRAWN	TETMM
CHECKED	
APPROVED	
DATE	July 1989

COPYRIGHT:
ALL COLONIAL HOMES DESIGNS AND PLANS ARE SUBJECT TO COPYRIGHT AND SHALL NOT BE REPRODUCED, COPIED OR USED FOR CONSTRUCTION PURPOSES UNLESS SUPPLIED WITH A KIT FROM COLONIAL HOMES LTD.

SCALE 1:100 | SHEET 1 of 3

CODE COMPLIANCE CERTIFICATE

Section 43(3), Building Act 1991

ISSUED BY: DUNEDIN CITY COUNCIL

Telephone No:	477-4000	CCC No:	ABA 41699	Reference No:	5105419

(Insert a cross in each applicable box. Attach relevant documents).

PROJECT LOCATION

Name and Mailing Address:

BOSWORTH, ANDREW JAMES
C/O ELLISONS ALUMINIUM
P O BOX 1287
DUNEDIN 9015

LEGAL DESCRIPTION

Property Number: 5105419
Valuation Roll No: 26850 17409

Street Address:
48 TANNER ROAD, DUNEDIN 9001

Legal Description:

LOT 10 DP 20665

PROJECT

All ☑

Stage No .....of an intended .....stages

New Building ☐

Alteration ☑

Intended Use(s) in detail:
FIT NEW DOOR

Intended Life:

Indefinite, not less than 50 years ☑

Specified as ..... years

Demolition ☐

This is:

☑ A final code compliance issued in respect of all of the building work under the above building consent.

☐ An interim code compliance certificate in respect of part only, as specified in the attached particulars, of the building work under the above building consent.

☐ This certificate is issued subject to the conditions specified in the attached ..... page(s) headed "Conditions of Code Compliance Certificate No:....." (being this certificate).

The Council charges payable on the uplifting of this code compliance, in accordance with the attached details are: $

Receipt No:

Signed for and on behalf of the Council:

Name:.....

Position: AUTHORISED OFFICER Date: 21/07/2004

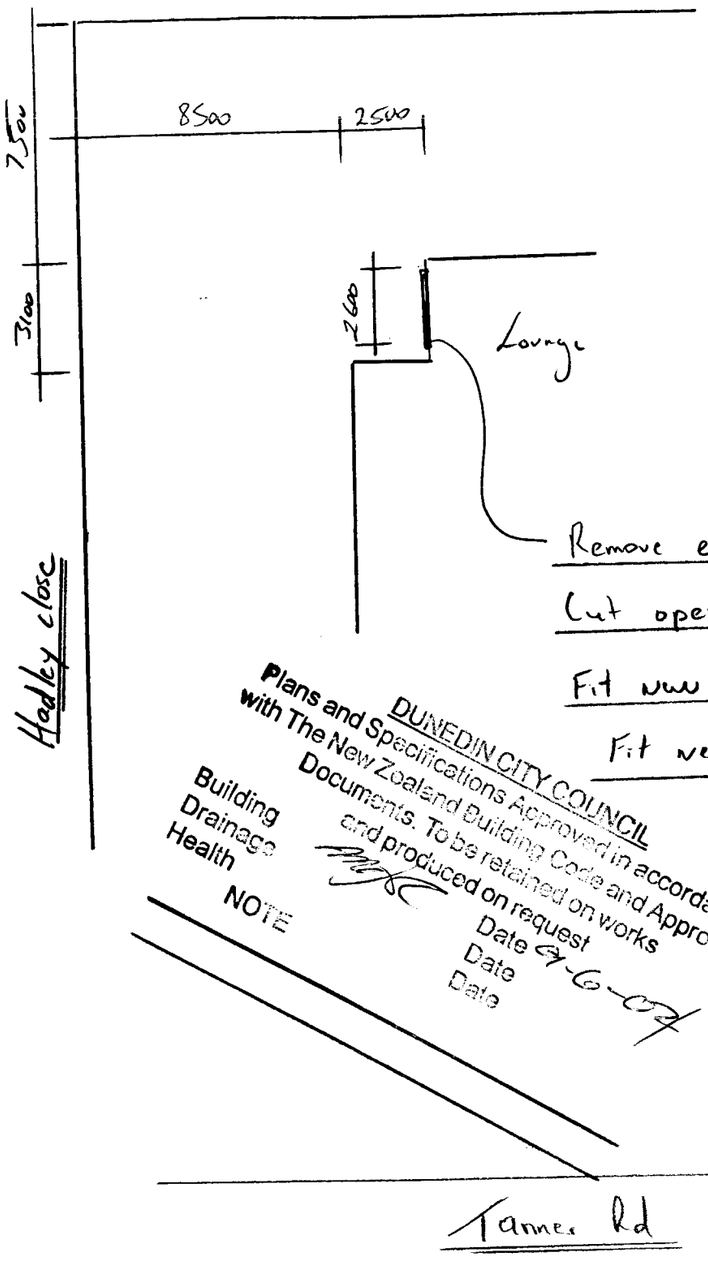

DOMESTIC SMOKE ALARM
Smoke alarms complying with the NZBC clause F7 are required in this building.

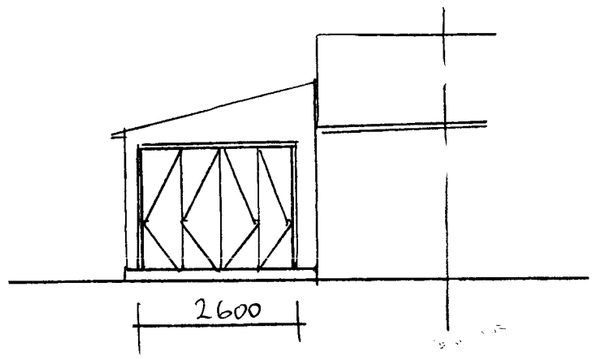

Elevation

Job Detail

Remove existing window

Cut opening wider to 2600

Install new 200x100 lintel

Install new bifold doors

Make good opening

Plans for Andrew Bosworth

48 Tanner Rd

Dunedin

FAIRVIEW
ALUMINIUM JOINERY

3 Timaru Place, Mt Wellington, Auckland, New Zealand
P.O. Box 51075, Pakuranga, Auckland, New Zealand
Phone 0-9-574 2900. Fax: 0-9-574 2901

WINDOW ASSOCIATION OF NEW ZEALAND
MEMBER

B

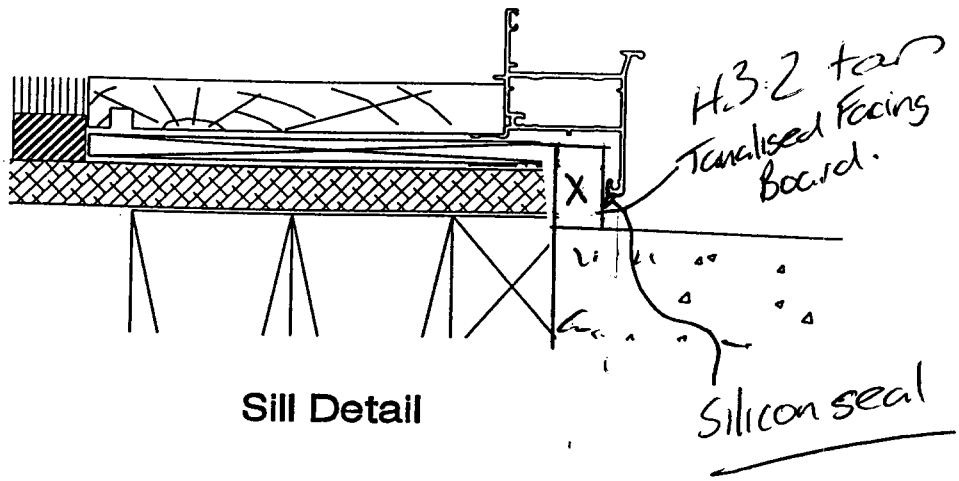

Sill Detail

L1699

PLASTER	INSULCLAD	GIB BOARD	CONCRETE	SEALANT	FLOORING	BUILDING PAPER	MESH

D:\DWG\MKT\FINDT.016

FAIRVIEW
WINDOWS & DOORS

3 Timaru Place, Mt Wellington, Auckland, New Zealand
P.O. Box 51075, Pakuranga, Auckland, New Zealand
Phone 0-9-574 2900. Fax: 0-9-574 2901

WINDOW ASSOCIATION OF NEW ZEALAND
MEMBER

INSTALLATION DETAIL - HINGED DOOR

Timber Framing with Weatherboard

H

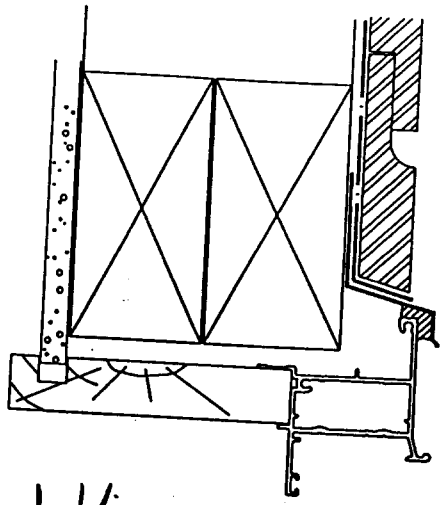

Head View

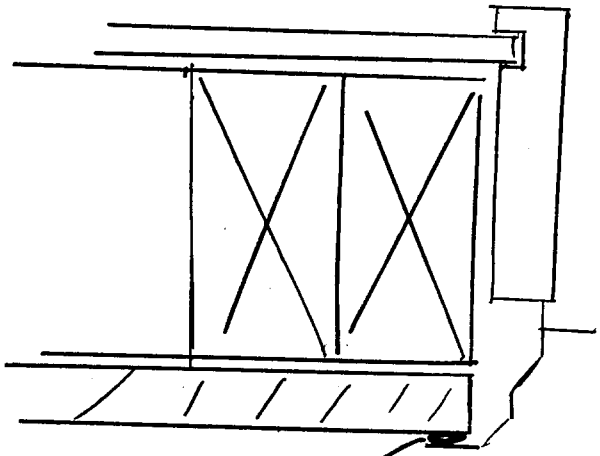

Jamb View

Silicone seal jambs to weatherboard

The same as all the windows in this house

DUNEDIN CITY COUNCIL
Kaunihera-a-rohe o Otepoti

50 The Octagon, PO Box 5045, Moray Place
Dunedin 9058, New Zealand
Telephone: 03 477 4000, Fax: 03 474 3488
Email: dcc@dcc.govt.nz
www.dunedin.govt.nz

CODE COMPLIANCE CERTIFICATE

DCCBCA-F4-07-v3.0

Section 95, Building Act 2004

CCC NO:	ABA-2014-48	Telephone No:	03 477 4000

APPLICANT

A J Bosworth and L A Bosworth and C J Bosworth
C/O John Alipate
11 Dickson Street
Macandrew Bay
Dunedin 9014

PROJECT LOCATION

48 Tanner Road Dunedin

LEGAL DESCRIPTION

Legal Description: LOT 10 DP 20665

Valuation Roll No: 26850-17409

Building Name: N/A

PROJECT

Work Type:
Alterations/Repairs

Intended Use/Description of Work:
Alter Dwelling - Relocate and Install New Kitchen, Retrofit Double Glazed Windows, Doors (Majority), Install Skylight, Beams, Remove Bath, Remove Walls, Hot Water Cylinder, Fire

Intended Life:
Indefinite, not less than 50 years.

This CCC also applies to the following Amended Consents:
N/A

The Building Consent Authority named above is satisfied, on reasonable grounds, that:

(a) The building work complies with the Building Consent, and
(b) The specified systems in the building are capable of performing to the performance standards set out in the Building Consent.

☐ Compliance Schedule attached

Signed for and on behalf of the Council:

Team Leader Inspections

Date: 11 November 2014

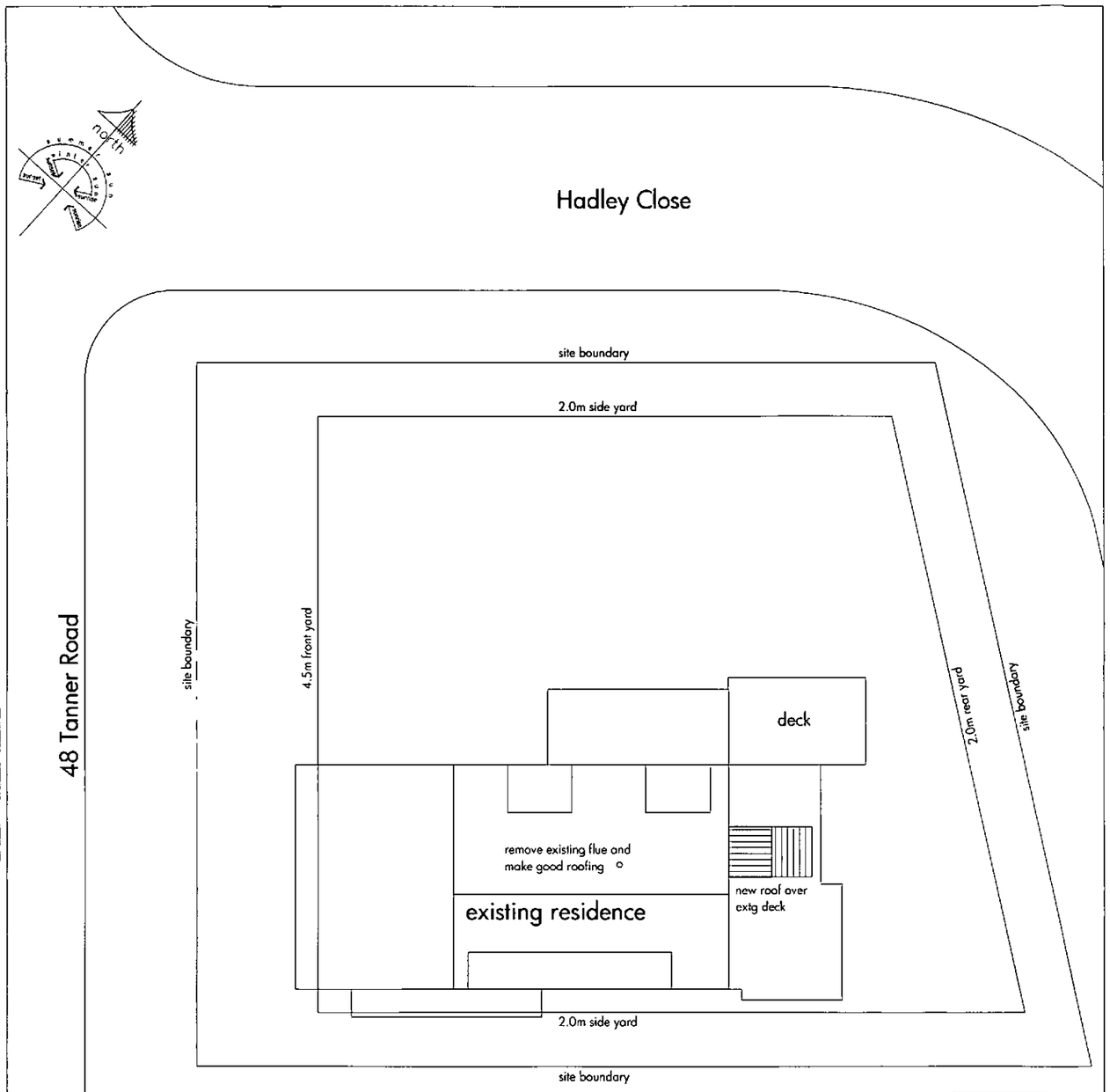

site plan

scale 1:200 @ A3

Legal Description	
valuation number:	26850-17409
property number:	5105419
legal description:	LOT 10 DP 20665
land survey district:	Dunedin
area:	780m²

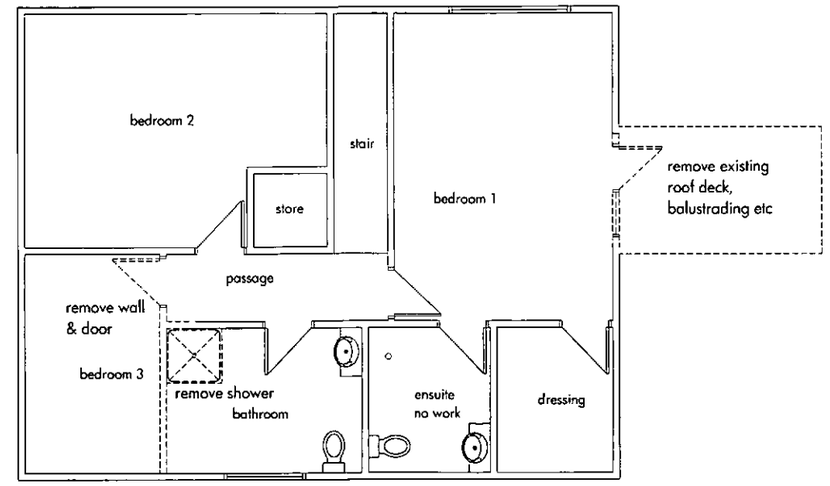

existing first floor plan

showing demolition

scale 1:100 @ A3

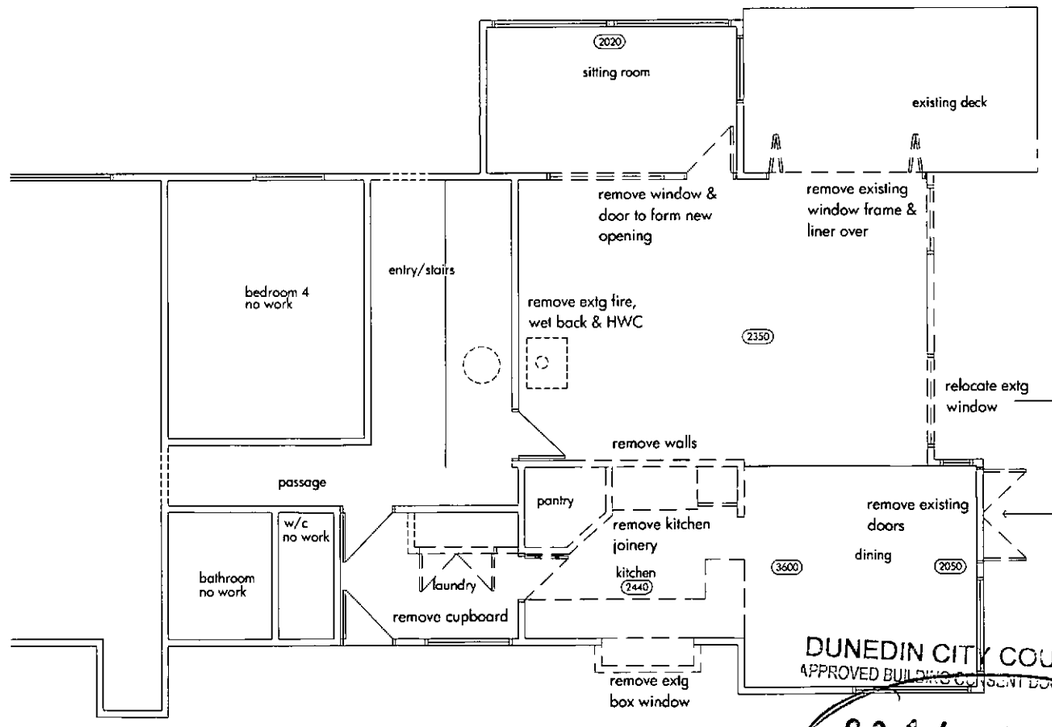

DUNEDIN CITY COUNCIL
APPROVED BUILDING CONSENT DOCUMENTS
2014-48

existing ground floor plan

showing demolition

scale 1:100 @ A3

NOTES:
1. Check & confirm all dimensions on site
2. Do not scale off these drawings
3. This plan is to be read in conjunction with the accompanying specification and consultants drawings

thedesignstudio
tel : 03 477 2664 | fax : 03 477 2695
office@thedesignstudio.co.nz : www.thedesignstudio.co.nz
5th floor Consultancy House : 7 Bond Street : PO Box 203 : Dunedin

Proposed Alterations to Residence for Refresh Renovations:

Lynn & Andrew Bosworth

48 Tanner Road, Dunedin

No.	Revision:
a	hand notes by D. Littleton 21/3/14

Building Consent Issue

Site Plan
Demolition

A01a of 4

Copyright: the copyright of these drawings, CAD files and all parts thereof remain the property of thedesignstudio

Checked	Date	Drawn	Job No.
	27/1/2014	MA	1363

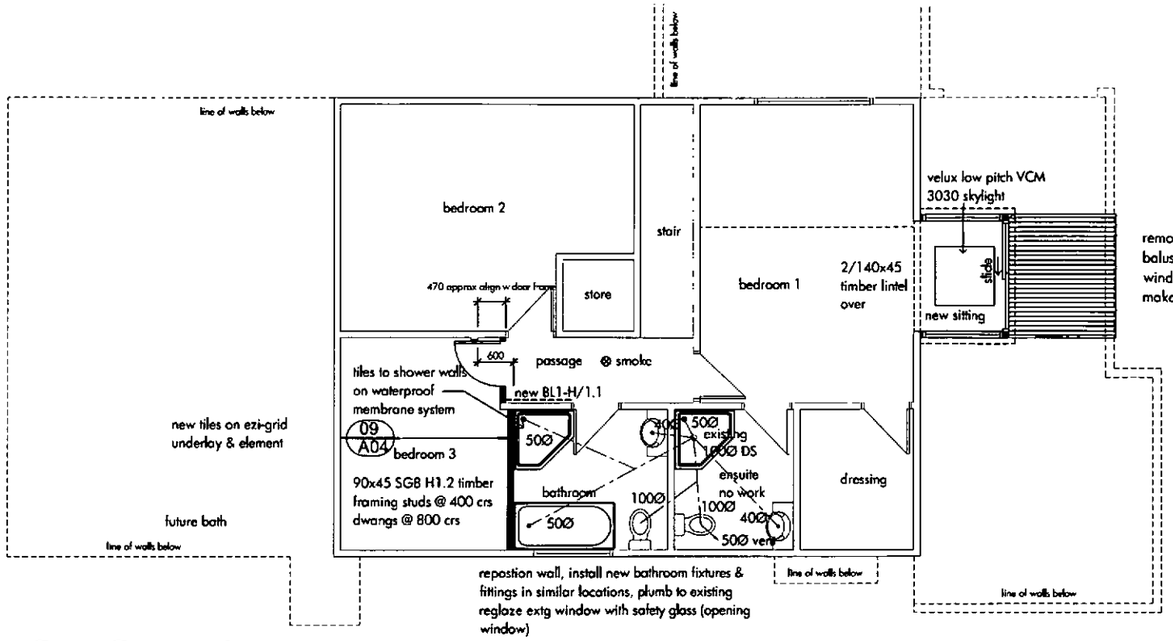

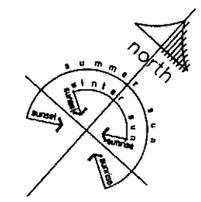

remove existing roof deck, balustrading etc, form new bay window , frame up for new roof & make good colour steel rooving

wall legend

- new 90x45mm SG8 H1.2 timber framing @ 400crs (dwangs @ 800crs max)
- new hinged timber door
- smoke — smoke alarm

NOTE: install domestic smoke alarms to comply with NZBC, section F7, clause 3.3.1 (within 3.0m of sleeping spaces)

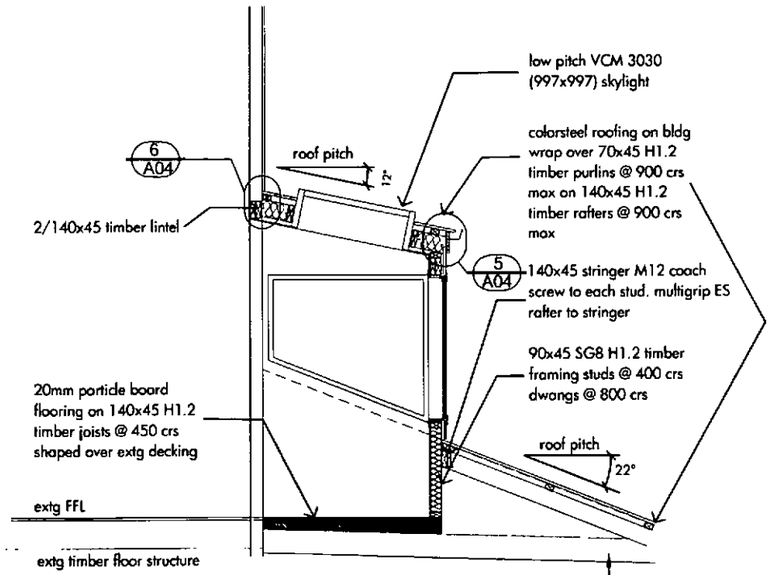

window bay cross section

scale 1:50 @ A3

first floor plan

showing proposed alterations

scale 1:100 @ A3

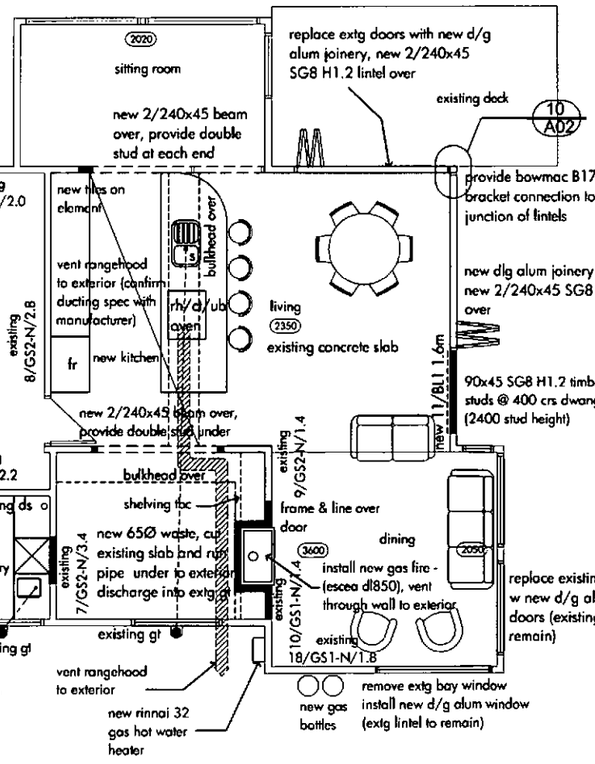

ground floor plan

showing proposed alterations

scale 1:100 @ A3

DUNEDIN CITY COUNCIL
Plans and Specifications Approved in accordance with The New Zealand Building Code and Approved Documents. To be retained on works and produced on request
Building — Date 1/4/14
Plumbing — Date
Health — Date
NOTE

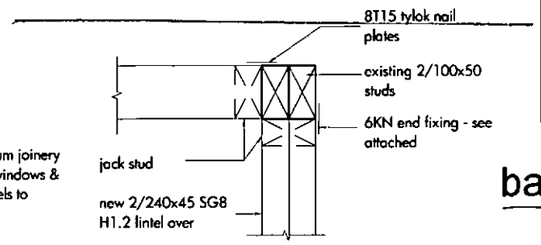

10 A02 corner junction

scale 1:5

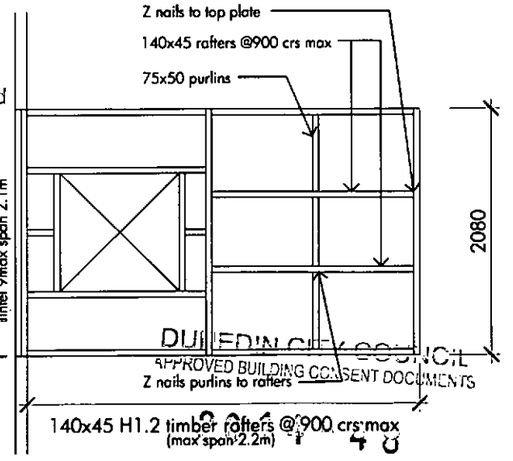

bay roof framing plan

scale 1:50 @ A3

NOTES:
1. Check & confirm all dimensions on site
2. Do not scale off these drawings
3. This plan is to be read in conjunction with the accompanying specification and consultants drawings

thedesignstudio
tel : 03 477 2664 | fax : 03 477 2695
office@thedesignstudio.co.nz : www.thedesignstudio.co.nz
5th floor Consultancy House : 7 Bond Street : PO Box 203 : Dunedin

Proposed Alterations to Residence for Refresh Renovations:

Lynn & Andrew Bosworth

48 Tanner Road, Dunedin

No.	Revision:
a	hand notes by D. Littleton 21/3/14

Building Consent Issue

Floor Plans, Cross Section & Framing

A02a of 4

Copyright: the copyright of these drawings, CAD files and all parts thereof remain the property of thedesignstudio

Checked	Date	Drawn	Job No.
	27/1/2014	MA	1363

building envelope risk matrix (high wind zone)		
risk factor	north east	south east
wind zone (per NZS 3604)	1	1
number of storeys	2	2
roof / wall intersection design	5	5
eaves width	5	5
envelope complexity	0	0
deck design	0	0
risk score	13	13

south east elevation

scale 1:50 @ A3

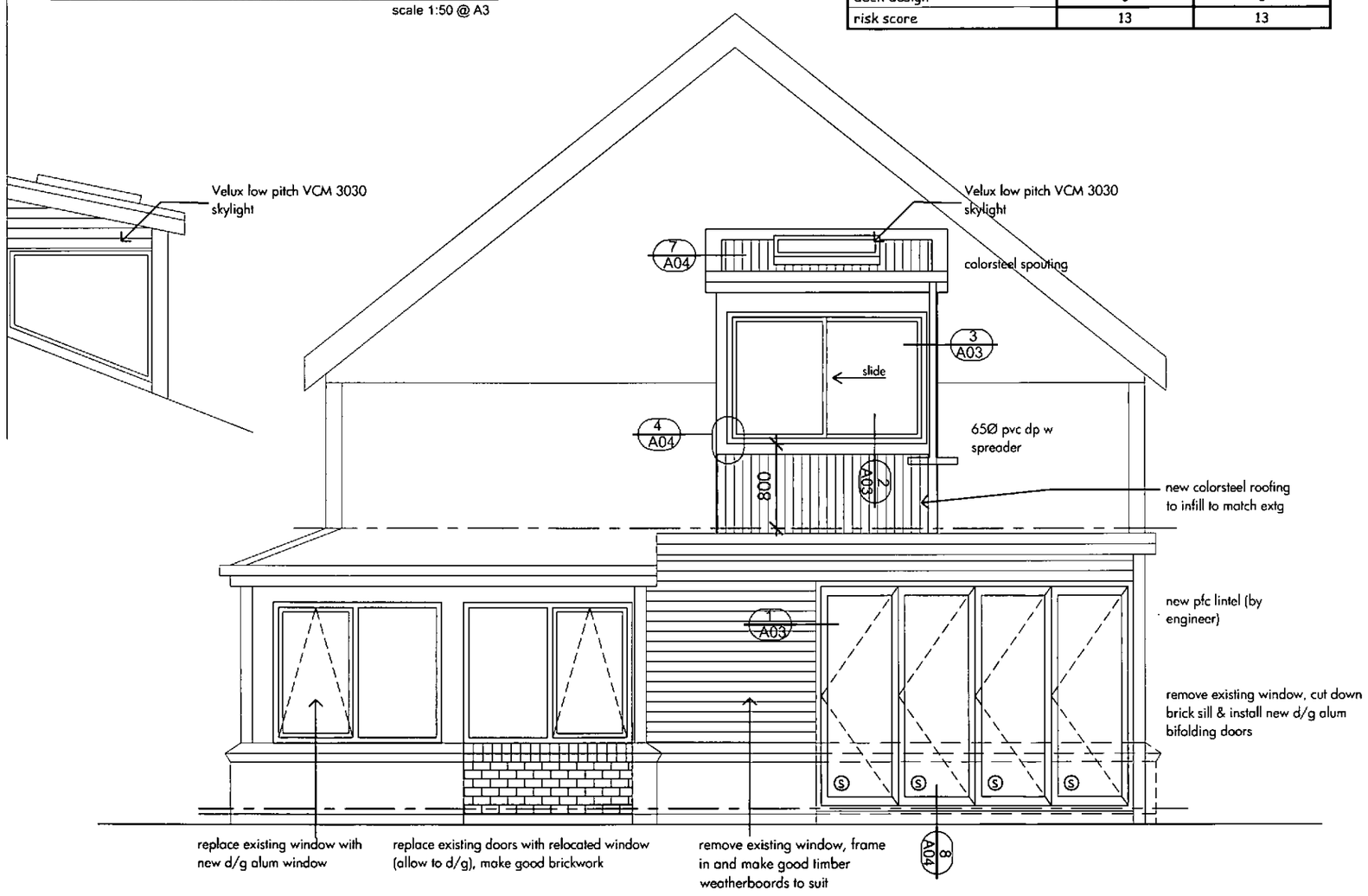

north east elevation

scale 1:50 @ A3

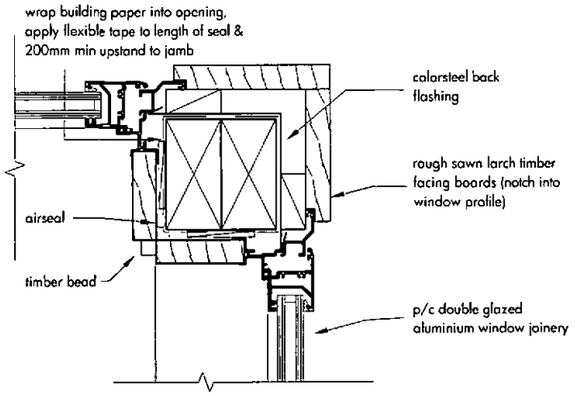

3 A03 **corner window jamb**
new rusticated w/boards (direct fix) scale 1:5

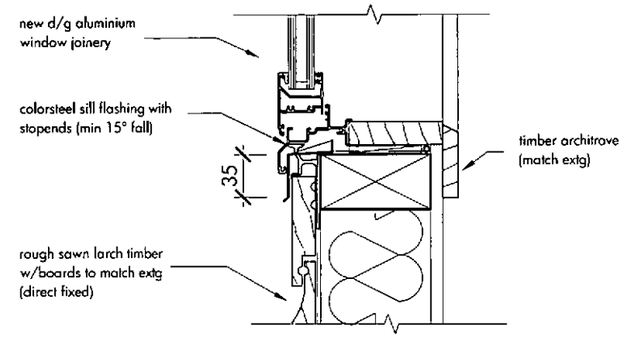

2 A03 **typical aluminium window sill**
new rusticated w/boards (direct fix) scale 1:5

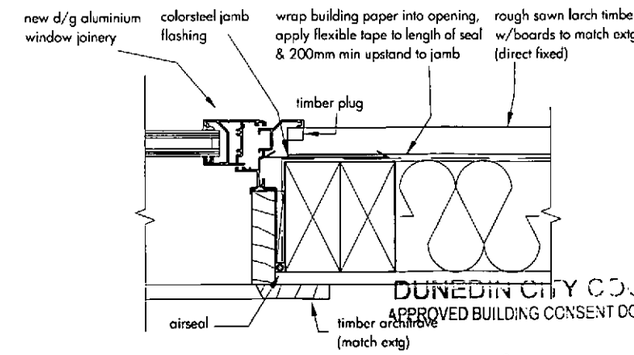

DUNEDIN CITY COUNCIL
APPROVED BUILDING CONSENT DOCUMENTS

1 A03 **typical aluminium window jamb** 2014-48
new rusticated w/boards (direct fix) scale 1:5

NOTES:
1. Check & confirm all dimensions on site
2. Do not scale off these drawings
3. This plan is to be read in conjunction with the accompanying specification and consultants drawings

thedesignstudio
tel : 03 477 2664 | fax : 03 477 2695
office@thedesignstudio.co.nz : www.thedesignstudio.co.nz
5th floor Consultancy House : 7 Bond Street : PO Box 203 : Dunedin

Proposed Alterations to Residence for Refresh Renovations:
Lynn & Andrew Bosworth
48 Tanner Road, Dunedin

No.	Revision:
a	hand notes by D. Littleton 21/3/14

Building Consent Issue

Elevations Details

A03a of 4

Copyright: the copyright of these drawings, CAD files and all parts thereof remain the property of thedesignstudio

Checked	Date	Drawn	Job No.
	27/1/2014	MA	1363

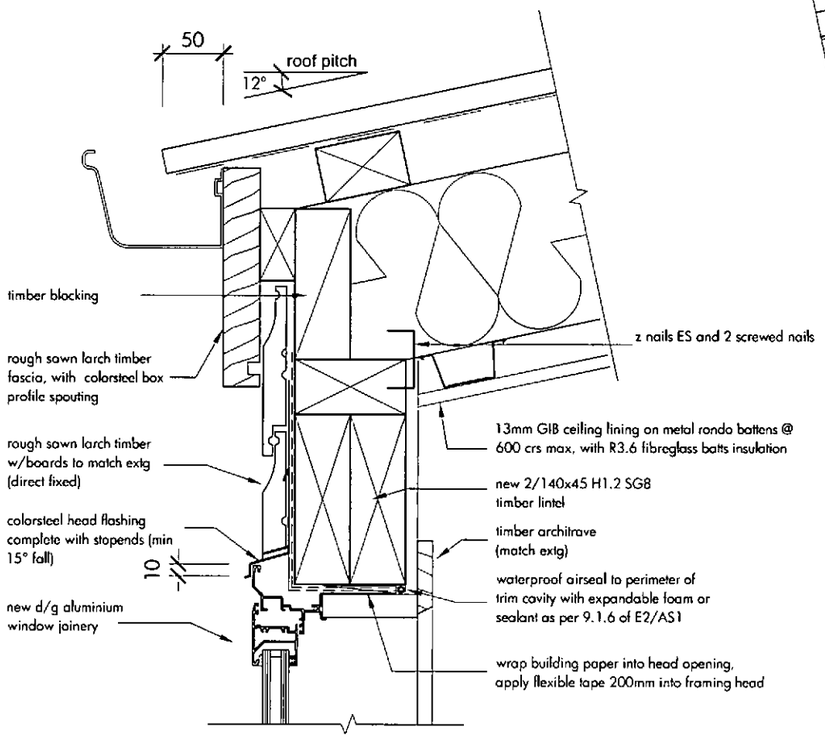

05 / A02 window head/eave detail
dormer window
scale 1:5

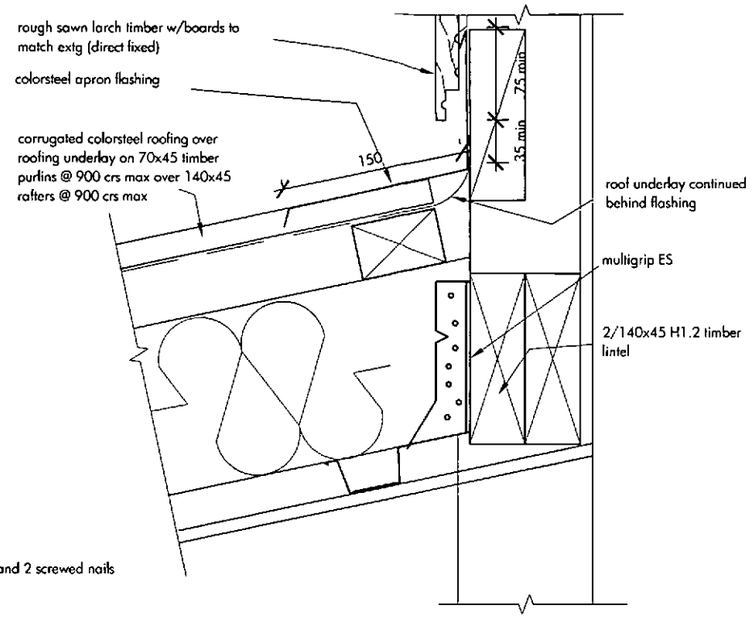

6 / A02 roof/wall junction
new rusticated w/boards (direct fix)
scale 1:5

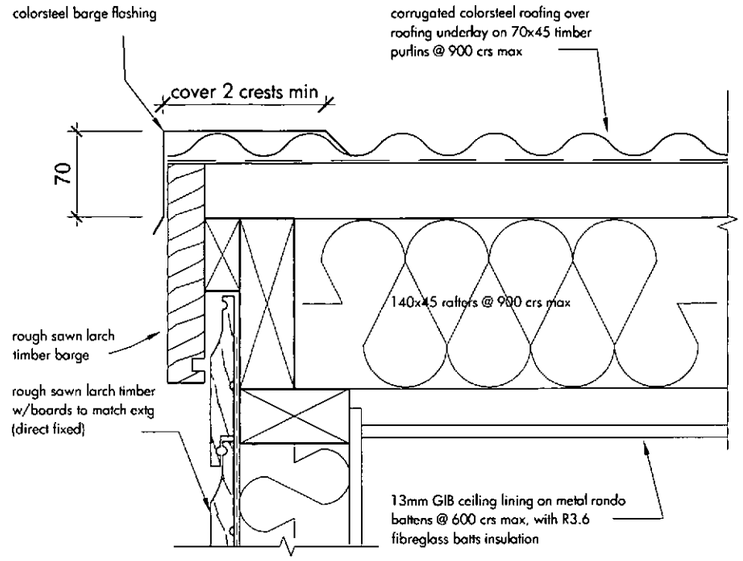

7 / A03 detail at barge
new rusticated w/boards (direct fix)
scale 1:5

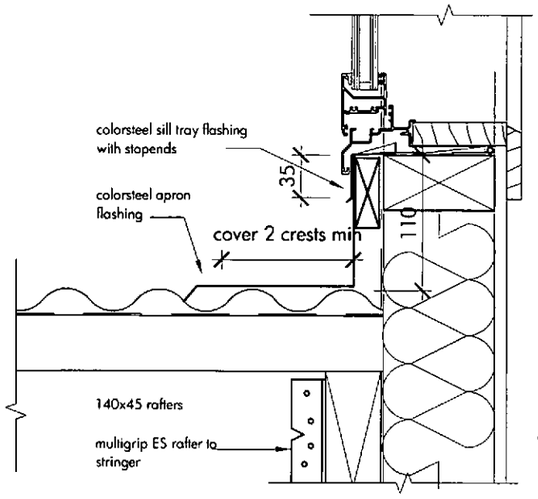

4 / A03 apron junction at dormer
scale 1:5

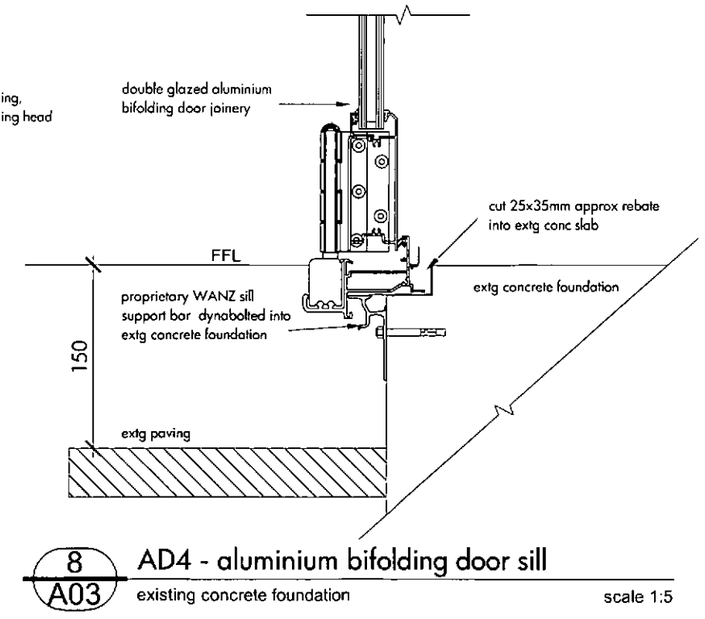

8 / A03 AD4 - aluminium bifolding door sill
existing concrete foundation
scale 1:5

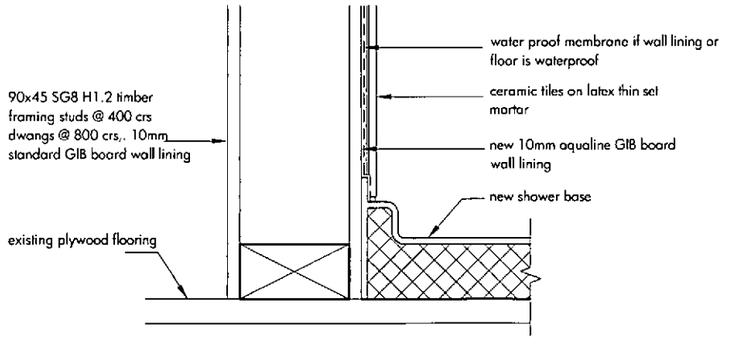

9 / A02 shower base detail
scale 1:5

DUNEDIN CITY COUNCIL
APPROVED BUILDING CONSENT DOCUMENTS

2014-48

NOTES:
1. Check & confirm all dimensions on site
2. Do not scale off these drawings
3. This plan is to be read in conjunction with the accompanying specification and consultants drawings

thedesignstudio
tel : 03 477 2664 | fax : 03 477 2695
office@thedesignstudio.co.nz : www.thedesignstudio.co.nz
5th floor Consultancy House : 7 Bond Street : PO Box 203 : Dunedin

Proposed Alterations to Residence for Refresh Renovations:
Lynn & Andrew Bosworth
48 Tanner Road, Dunedin

No.	Revision:
a	hand notes by D. Littleton 21/3/14

Building Consent Issue

construction details

A04a of 4

Copyright: the copyright of these drawings, CAD files and all parts thereof remain the property of thedesignstudio

Checked	Date	Drawn	Job No.
	27/1/2014	MA	1363

VCM
VCE

1
0°-60°

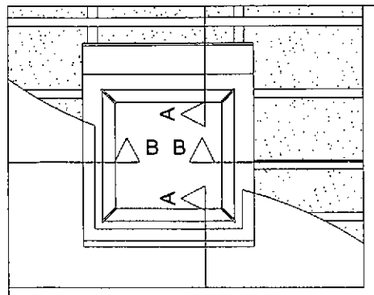

Pleas note:
Below 15 degrees:
- Any condensation that forms on the glass due to high humidity may drip
- Standing water and dirt left on the glass over time may cause smudging and corrosion on the glass

ELEVATION

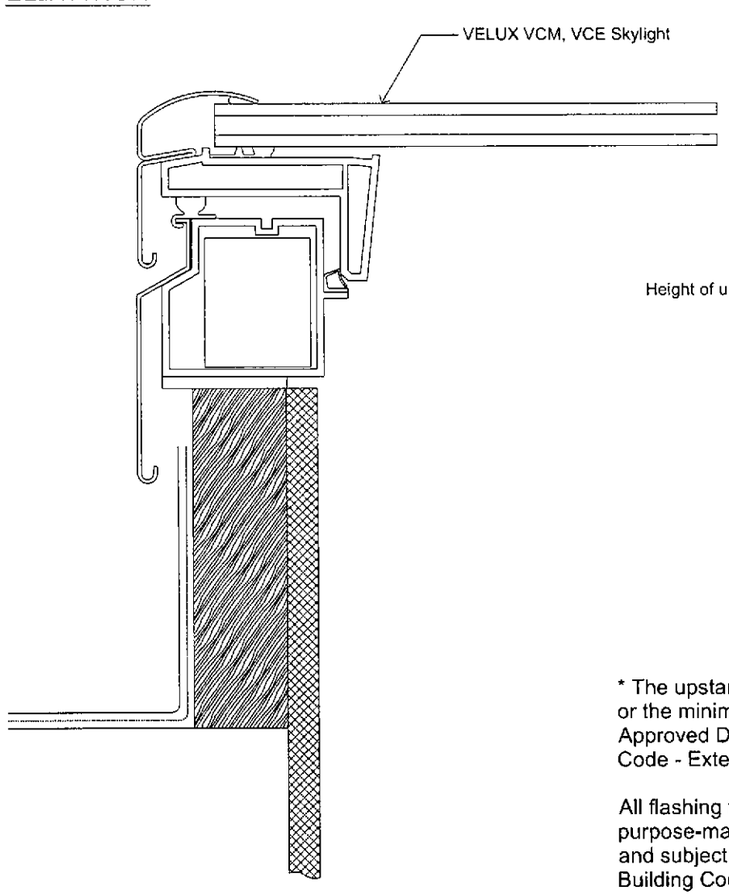

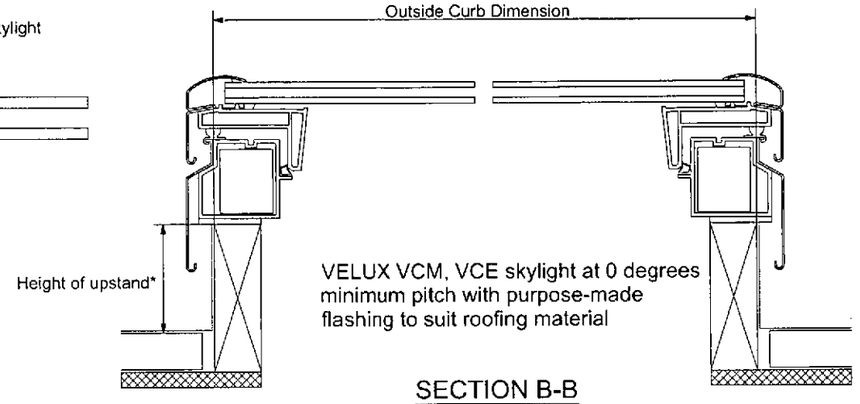

SECTION B-B

* The upstand shall be the greater of 110 mm or the minimum requirements as set out in the Approved Document for New Zealand Building Code - External Moisture, clause E2

All flashing for VCM & VCE skylights are to be purpose-made to suit the roofing material, and subject to Approved Document for NZ Building Code - External Moisture, clause E2

PRODUCT DIMENSIONS METRIC UNITS (MILLIMETERS)					
SIZE	OUTSIDE CURB WIDTH	SKYLIGHT WIDTH	OUTSIDE CURB HEIGHT	SKYLIGHT HEIGHT	DAYLIGHT AREA (SQ. M)
2222	648	688	648	688	0.24
2246	648	688	1257	1297.5	0.55
3030	851	891.1	851	891.1	0.49
4646	1257	1297.5	1257	1297.5	1.22

DUNEDIN CITY COUNCIL
APPROVED BUILDING CONSENT DOCUMENTS

2014-48

VELUX
Sky-Product Management

NEW ZEALAND LTD.
0800 650 445

VCM, VCE Skylight general installation details

	Name	Date
Drawn by		Dec. 09
Checked by		Dec. 09
Drawing No.		

This drawing is an instrument of service and is provided for informational use only.
© 2009 VELUX GROUP
® VELUX is a registered trademark

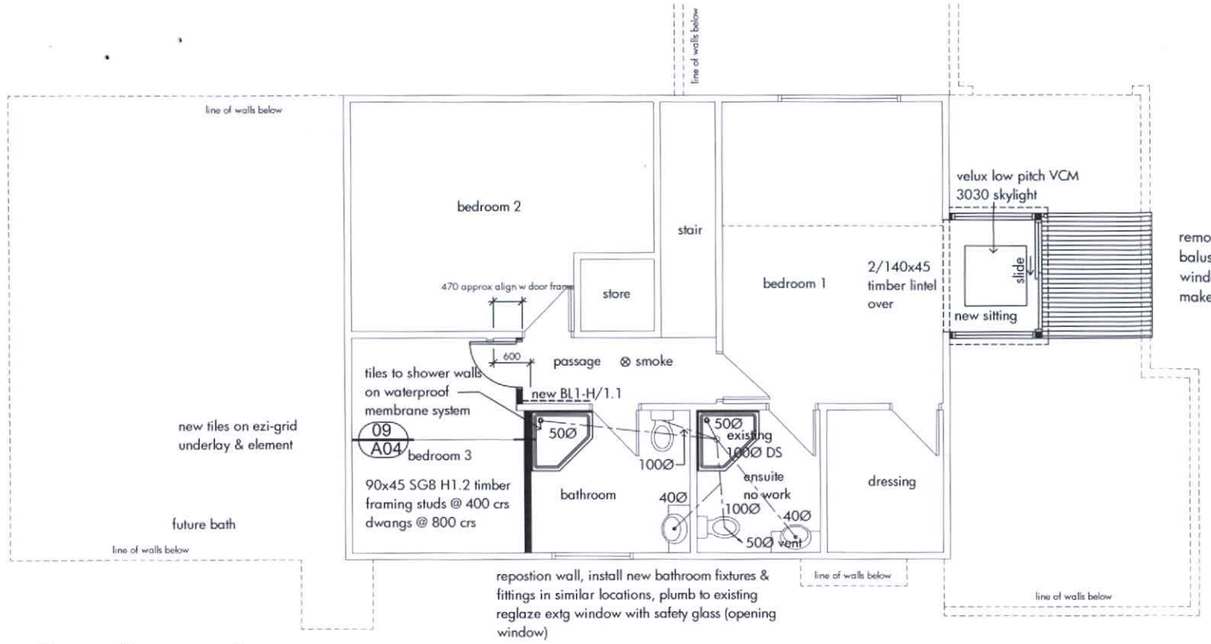

first floor plan

showing proposed alterations

scale 1:100 @ A3

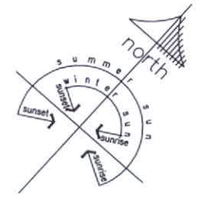

remove existing roof deck, balustrading etc, form new bay window , frame up for new roof & make good colour steel rooving

wall legend

- new 90x45mm SG8 H1.2 timber framing @ 400crs (dwangs @ 800crs max)
- new hinged timber door
- ⊗ smoke — smoke alarm

NOTE: install domestic smoke alarms to comply with NZBC, section F7, clause 3.3.1 (within 3.0m of sleeping spaces)

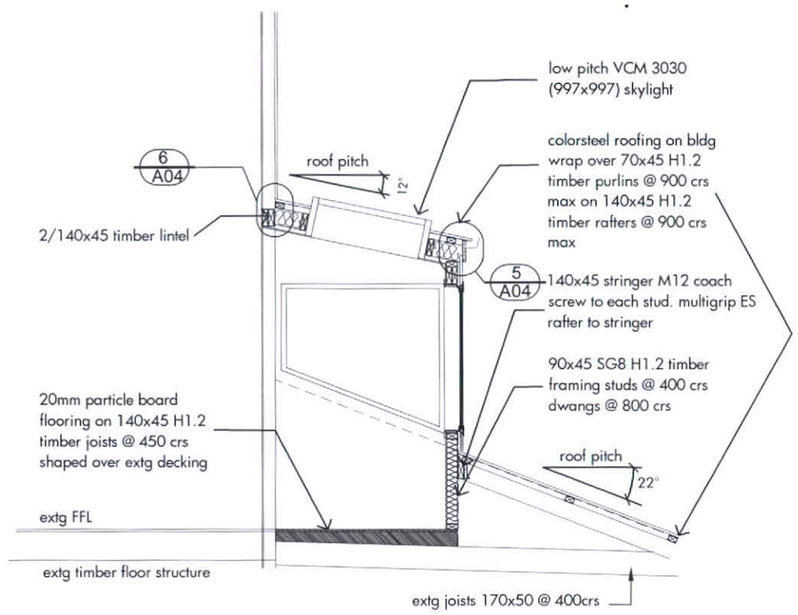

window bay cross section

scale 1:50 @ A3

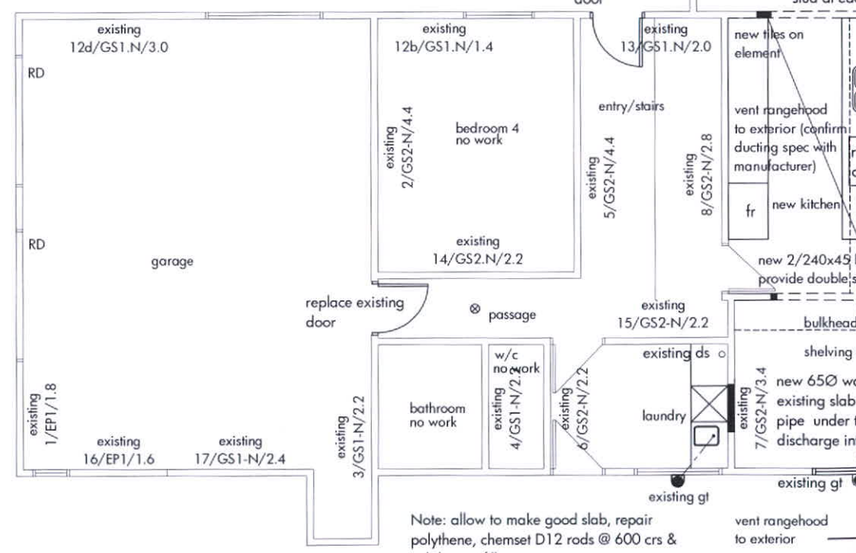

ground floor plan

showing proposed alterations

scale 1:100 @ A3

CUSTOMERS COPY

Received by: Kerri
Date: 21/10/2014
ABA No: 2014-48

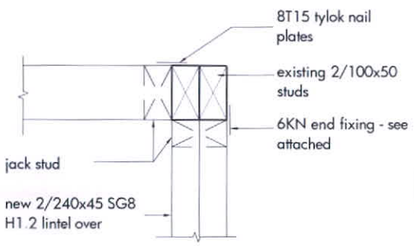

10 A02 **corner junction**

scale 1:5

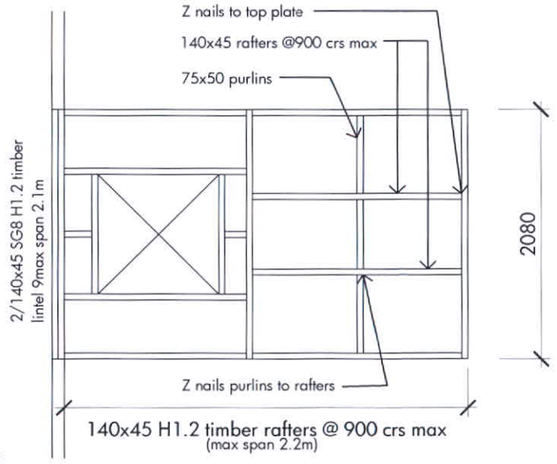

bay roof framing plan

scale 1:50 @ A3

NOTES:
1. Check & confirm all dimensions on site
2. Do not scale off these drawings
3. This plan is to be read in conjunction with the accompanying specification and consultants drawings

thedesignstudio
tel : 03 477 2664 | fax : 03 477 2695
office@thedesignstudio.co.nz : www.thedesignstudio.co.nz
5th floor Consultancy House : 7 Bond Street : PO Box 203 : Dunedin

Proposed Alterations to Residence for Refresh Renovations:

Lynn & Andrew Bosworth
48 Tanner Road, Dunedin

No.	Revision:
a	hand notes by D. Littleton 21/3/14

Building Consent Issue

Floor Plans, Cross Section & Framing

A02a of 4

Copyright: the copyright of these drawings, CAD files and all parts thereof remain the property of thedesignstudio

Checked	Date	Drawn	Job No.
	20/10/2014	MA	1363

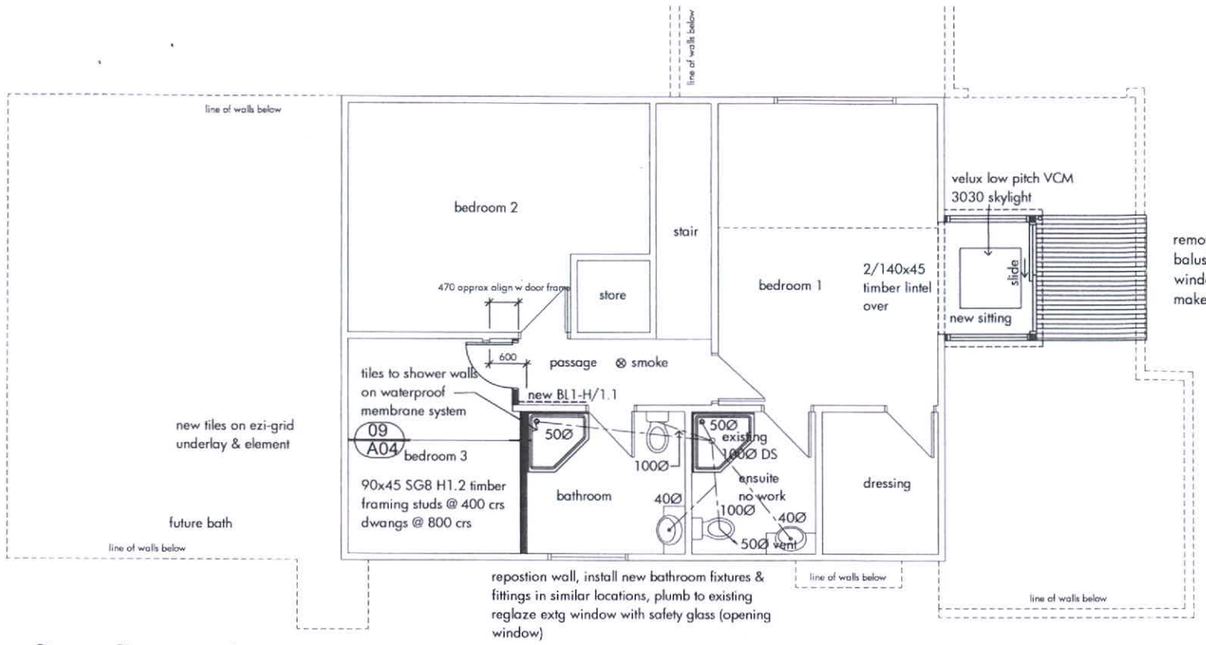

first floor plan

showing proposed alterations

scale 1:100 @ A3

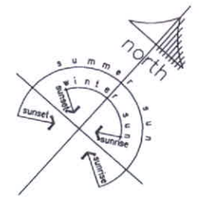

remove existing roof deck, balustrading etc, form new bay window , frame up for new roof & make good colour steel rooving

wall legend

- new 90x45mm SG8 H1.2 timber framing @ 400crs (dwangs @ 800crs max)
- new hinged timber door
- ⊗ smoke — smoke alarm

NOTE: install domestic smoke alarms to comply with NZBC, section F7, clause 3.3.1 (within 3.0m of sleeping spaces)

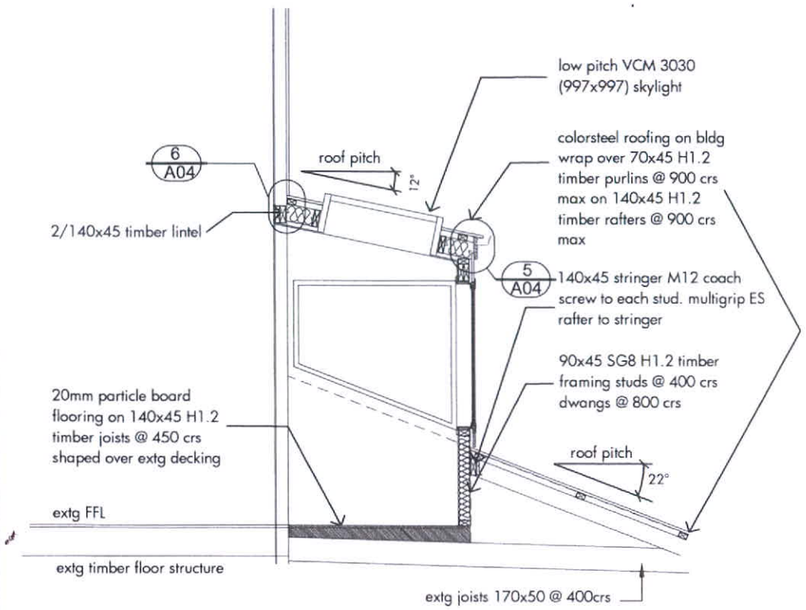

window bay cross section

scale 1:50 @ A3

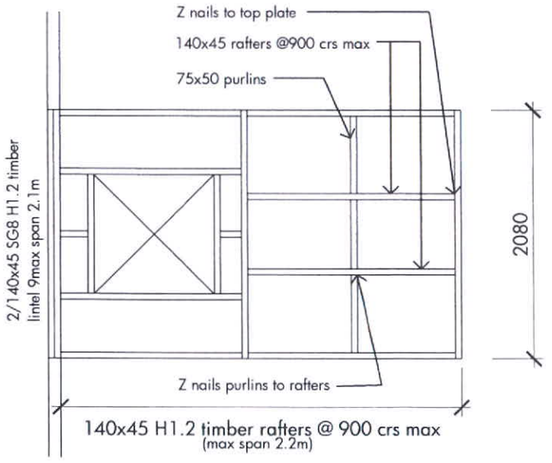

bay roof framing plan

scale 1:50 @ A3

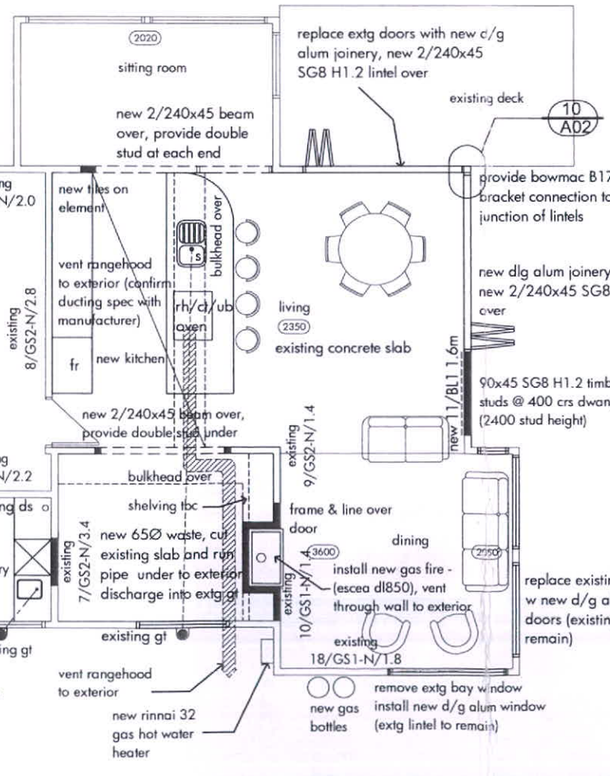

ground floor plan

showing proposed alterations

scale 1:100 @ A3

Received by: Kovc
Date: 21/10/2014
ABA No: 2014-48

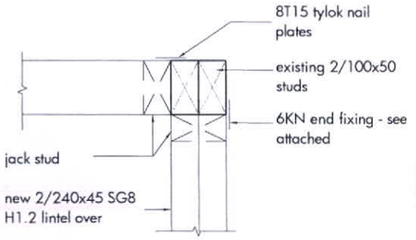

10
A02
corner junction

scale 1:5

NOTES:
1. Check & confirm all dimensions on site
2. Do not scale off these drawings
3. This plan is to be read in conjunction with the accompanying specification and consultants drawings

thedesignstudio
P:\Logos\thedesignstudio\thedesignstudio Colour.bmp
tel : 03 477 2664 | fax : 03 477 2695
office@thedesignstudio.co.nz : www.thedesignstudio.co.nz
5th floor Consultancy House : 7 Bond Street : PO Box 203 : Dunedin

Proposed Alterations to Residence for Refresh Renovations:

Lynn & Andrew Bosworth

48 Tanner Road, Dunedin

No.	Revision:
a	hand notes by D. Littleton 21/3/14

Building Consent Issue

Floor Plans, Cross Section & Framing

A02a of 4

Copyright: the copyright of these drawings, CAD files and all parts thereof remain the property of thedesignstudio

Checked	Date	Drawn	Job No.
	20/10/2014	MA	1363

Down loaded from existing electronic file-DCC computer system 19/2/14.

PG L-8031
12-11-90

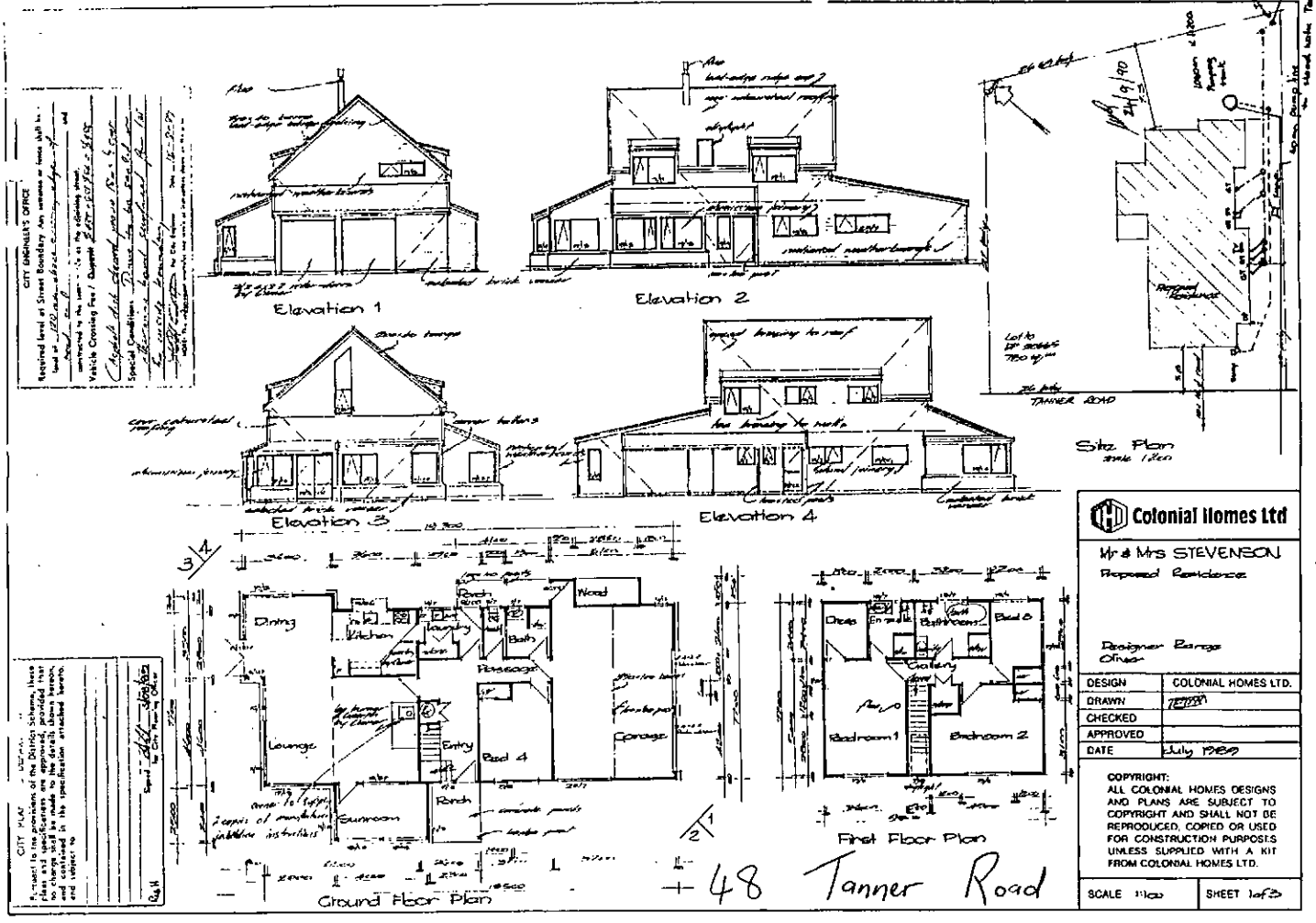

48 Tanner Road

DUNEDIN CITY COUNCIL
APPROVED BUILDING CONSENT DOCUMENTS

2014-48

DUNEDIN DRAINAGE AND SEWERAGE BOARD

APPLICATION No. C/1769

DATE

HOUSE CONNECTION PLAN.

SCALE 1/8 in. to a foot.

NEW SEWERAGE DRAINS: RED
STORMWATER: DOTTED BLACK
OLD DRAINS: FULL BLACK

H.C.I.B. 2113

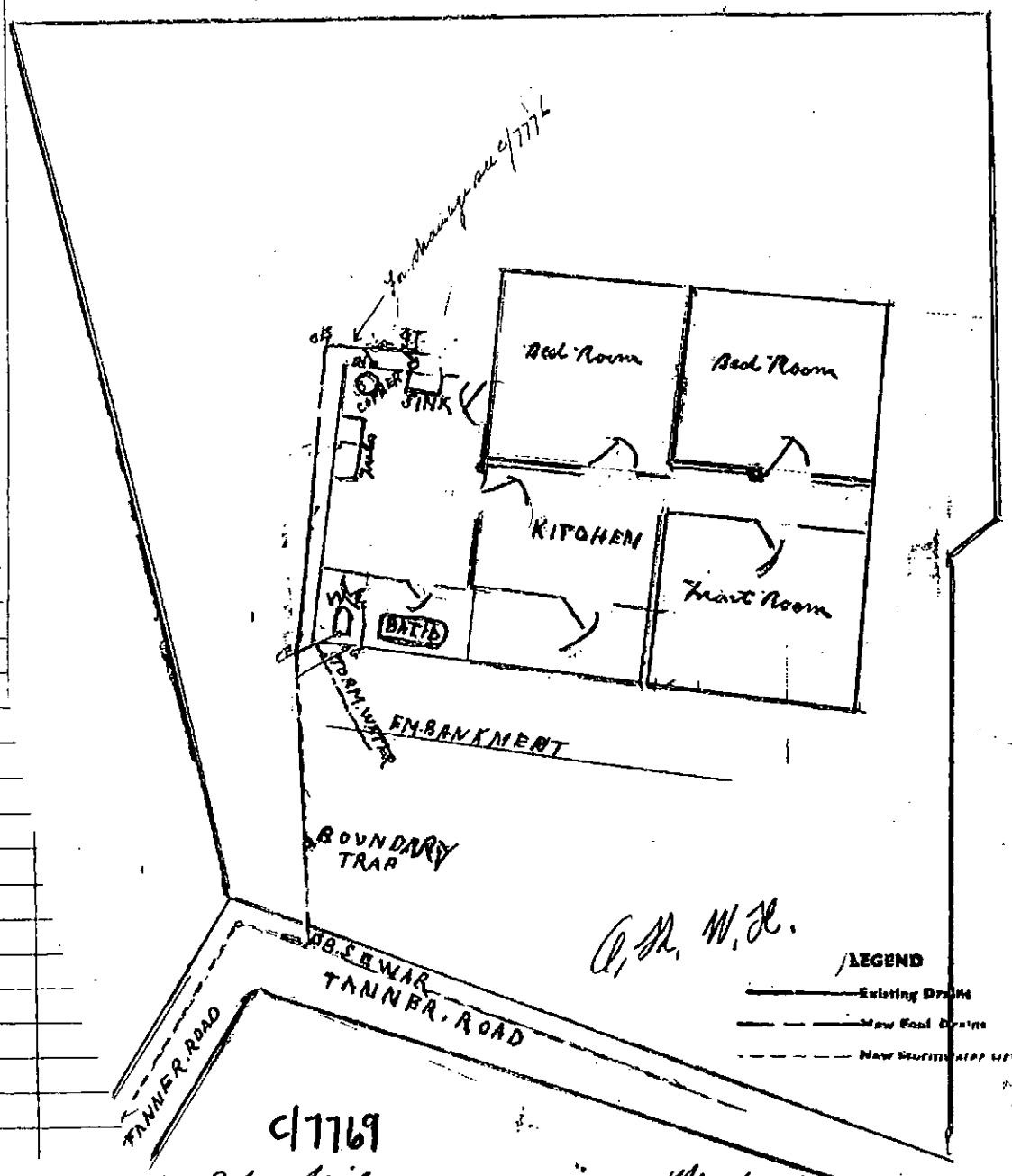

C/1769

Owner Mr Peter Nielson

Street 15 Tanner Road

Locality Woodhaugh

Block Woodend

Section 405

Allotment

Signature of Drainer P. R. Robb Plumber & Glasson Drainer

DUNEDIN CITY COUNCIL
APPROVED BUILDING CONSENT DOCUMENTS

2014-48